JACK 杰克

快速服务100%

零件手册
Parts Manual

A5E-A系列 A5E-A Series

1

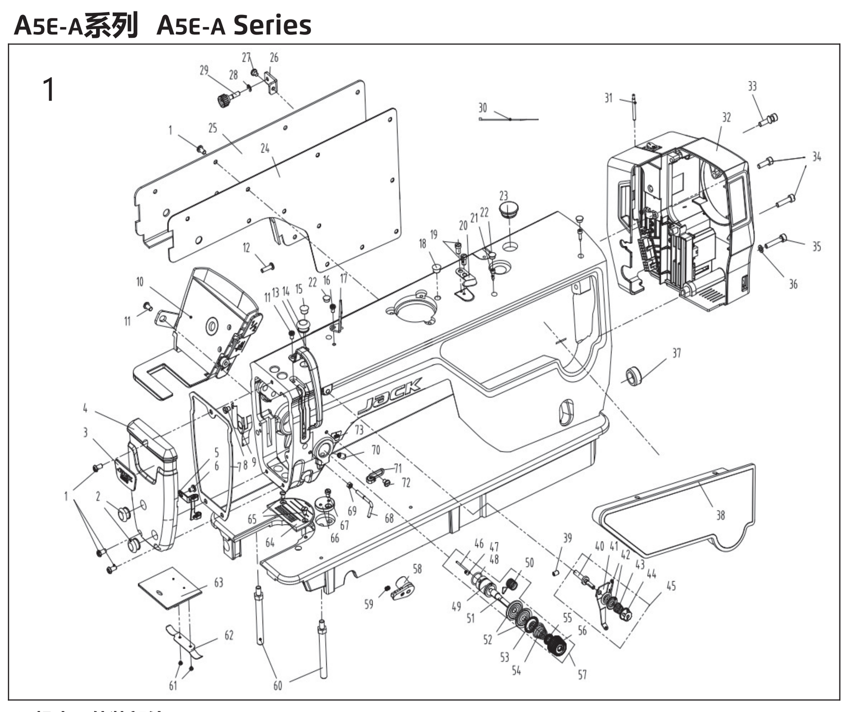

1. 机壳、外装部件/Machine Frame & Miscellaneous Cover Components

序号NO.	公司件号 Part NO.	名称 PartName	零件描述 Description	数量 Number
1	101S11001	后窗板螺钉SM3/16"×28 L=9	Screw SM3/16"×28 L=9	14
2	10122003	面板调节孔螺塞	Rubber plug	2
3	115037001	面板商标牌	Head card	1
4	930000262	面板（喷漆）	Face plate asm	1
5	13813005	左线钩	Thread guide left	1
6	101S11007	右线钩螺钉SM11/64"×40 L=6	Screw SM11/64"×40 L=6	1
7	115022002	面板垫	Face plate gasket	1
8	101S11027	防油板螺钉SM1/8"×44 L=3.4	Screw SM1/8"×44 L=3.4	1
9	113812019	面部防油板	Face oil shield asm.	1
	11412082	面部防油板(厚料)	Face oil shield asm.(H)	1
10	11503002900	倒缝开关组件(三开关)	Three switch components	1
11	101S11004	挑线杆护罩螺钉SM3/16"×28 L=7	Screw SM3/16"×28 L=7	2
12	101S11026	油泵安装螺钉SM15/64"x28 L=9	Screw SM15/64"X28 L=9	1
13	13812018	挑线杆防护罩	Thread take-up lever cover	1
14	10122004	针杆曲柄螺孔塞	Rubber plug	1
15	10122005	挑线连杆销螺孔塞	Rubber plug	1
16	101S11004	挑线杆护罩螺钉SM3/16"×28 L=7	Screw SM3/16"×28 L=7	1
17	13512004	三孔线勾	3-hole thread guide	1
18	10122005	挑线连杆销螺孔塞	Rubber plug	1
19	114S11015	割线刀螺钉SM9/64"×40 L=6	Screw SM9/64"×40 L=6	2
20	11419001	割线刀	Knife	1
21	138S05001	操作面板螺钉	Screw	2
22	13822001	操作屏孔塞	Rubber plug	3
23	20722002	油封	Oil sealing washer	1
24	115022001	后窗板垫	Side plate gasket	1
25	930000263	后窗板（喷漆）	Side plate	1
26	13812109	侧盖固定板	Fixed plate	1
27	S04010	螺钉M4×5.5	ScrewM4×5.5	1
28	H05002	卡簧3	Circlip 3	1
29	138S30007	侧盖螺钉	Screw	1
30	113811004	尼龙扎带	Cable band	4
31	115026002	电控罩壳销	Pin	1
32	11503011800	一体机控制器	Electronic components	1
33	1150NS10004	电控罩壳螺钉组件	Screw	1
34	114S13001	螺栓(内六角)M5×20	Screw	2
35	114S30001	M5x25	Screw	1
36	W01009	GB/T97.1-1985垫圈 5	Washer 5	1
37	114022002	下轴工艺孔塞	Rubber plug	1
38	11503011900	操作面板	Control panel(Q)	1
39	138S08006	小夹线器固定螺钉SM3/16"×28 L=7	Screw SM3/16"×28 L=7	1
40	13810008	小夹线器螺柱	Thread tension post	1
41	13812066	过线板	Thread tension guide plate	1
42	14112017	小夹线板	Thread tension disk	2
43	11227001	小夹线弹簧	Thread tension spring	1
44	141S16019	小夹线器螺母	Thread tension nut	1
45	1411300400	小夹线器组件	Thread tension asm.	1
46	11326012	松线钉	Tension release pin	1
47	101S15005	夹线螺钉紧固螺钉SM9/64"x40 L=5.5	Screw SM9/64"x40 L=5.5	1
48	10122014	挑线簧调节座O型圈	Rubber ring	1
49	10103011	挑线簧调节座	Thread tension base	1
50	10127001	挑线簧	Thread take-up spring	1
	10127031	挑线簧(厚料)	Thread take-up spring(H)	1
51	141S30001	夹线螺钉	Thread tension post	1
52	14112015	夹线板	Thread tension disk	2
53	14112016	松线板	Disk stopper	1
54	114127004	夹线簧	Thread tension spring	1
	11427050	夹线弹簧(厚料)	Thread tension spring A (H)	1
55	10112007	夹线制动板	Thread disk rotating stopper	1
56	115011017	夹线螺母	Thread tension nut	1
57	11501300400	夹线器组件(精密)	Thread tension asm.	1
	11501300500	夹线器组件(厚)	Thread tension asm.(H)	1
58	11493000300	电子夹线器组件	Nest less e-device	1
59	207S14007	GB/T80 凹端紧定螺钉 M4×6	Screw M4X6	1
60	140S12001	底板支柱	Machine head stud	2
61	101S11019	推板簧螺钉	Slide plate	2
62	10127009	推板簧	Slide plate spring	1
63	10115002	推板	Screw SM3/32"x56 L=2	1
64	11414006	针板	Needle plate	1
	11315001	针板(厚料)	Needle plate(H)	1
	10815001	针板(-7)	Needle plate(-7)	1
65	104S17002	针板螺钉	Screw SM11/64"x40	2
66	13812019	卷边器座	Ruler stop seat	1
67	101S11002	卷边器座螺钉	Screw SM11/64"x40 L=5.5	1
68	14313001	缓线钩	Thread guide	1
69	141S16014	螺母SM11/64"x40	Nut SM9/64"x40	1
70	101S15010	左销螺钉SM15/64"×28 L=10.5	Screw SM15/64"x28 L=10.5	1
71	10113004	右线勾	Thread guide right	1
72	101S11007	右线钩螺钉SM11/64"×40 L=6	Screw SM11/64"x40 L=6	1
73	115037011	夹线器标识	Clip identification	1

2

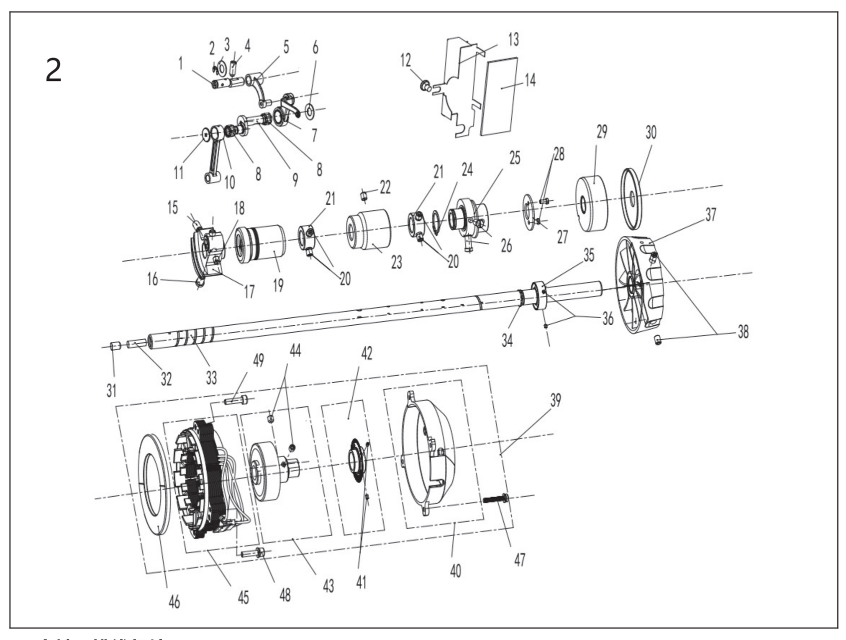

2. 上轴、挑线部件/Main Shaft & Thread Take-up Components

序号NO.	公司件号 Part NO.	名称 PartName	零件描述 Description	数量 Number
1	115026015	挑线连杆销	Thread take-up connecting rod pin	1
	10126001	挑线连杆销	Thread take-up connecting rod pin(-H/-7)	1
2	H05013	GB/T 896-1986挡圈6(H-M)	Snap ring 6 (H-M)	1
3	11328010	垫片(H-M)	washer(H-M)	1
4	101S15001	上轮螺钉SM15/64"x28 L=15	Screw SM15/64"x28 L=15	1
5	11305010	挑线连杆	Thread take-up connecting rod	1
	10105001	挑线连杆(厚料/-7)	Thread take-up connecting rod(H/-7)	1
6	10112003	针杆曲柄护板	Needle bar crank protecting plate	1
7	11503800200	挑线杆分组件	Thread take-up lever asm.	1
	1133800200	挑线杆组件(厚料)	Thread take-up lever asm.(H)	1
	1013800100	挑线杆分组件	Thread take-up lever asm.(-7)	1
8	10124001	挑线杆滚针轴承	Needle bearing	2
9	115004007	挑线曲柄	Thread take-up crank	1
	1011000400	挑线曲柄分部件(厚料)	Thread take-up crank(H)	1
	11310012	挑线曲柄(-7)	Thread take-up crank(-7)	1
10	10105002	针杆连杆	Needle bar connecting rod	1
11	101S17001	挑线曲柄螺钉(左旋)	Screw	1
12	141S11002	螺钉SM3/16X28	Screw SM3/16X28	1
13	115012007	防油罩	Oil shield	1
14	14123001	防油罩油棉	Oil cotton	1
15	101S15004	针杆曲柄紧固螺钉SM9/32"x28 L=16	Screw SM9/32"x28 L=16	1
16	101S11003	针杆曲柄定位螺钉SM9/32"x28 L=16	Screw SM9/32"x28 L=16	1
17	113804014	针杆曲柄	Needle bar crank	1
	11404035	针杆曲柄(厚料)	Needle bar crank(H)	1
18	101S15002	送料轴挡圈螺钉SM1/4"x40 L=6	Screw SM1/4"x40 L=6	2
19	1410300200	上轴前轴套组件	Main shaft bushing front	1
20	101S14001	上轴中套挡圈螺钉	Screw	4
21	10108001	上轴挡圈	Main shaft thrust collar	2
22	101S15006	夹线器螺钉SM15/64"x28 L=7	Screw SM15/64"x28 L=7	1
23	12203002	主轴中轴套	Main shaft bushing mid	1
24	H03002	挡圈20	Snap ring 20	1
25	115010005	送料偏心轮	Feed eccentric cam	1
	400811	送料偏心轮(厚料)	Feed eccentric cam (H)	1
26	101S11013	送料偏心轮螺钉 SM1/4"x40 L=13	Screw SM1/4"x40 L=13	2
27	10112017	送料偏心轮盖板	Cover plate	1
	10812002	送料偏心轮盖板(厚料)	Cover plate(H)	1
28	1150NS11001	偏心轮盖板螺钉SM9/64"x40 L=7	Screw SM9/64"x40 L=7	2
29	13803002	上轴后轴套	The rear axle sleeve	1
30	10122105	上轴后套挡油油封	Oil seal	1
31	10122012	上轴孔塞	Rubber plug	1
32	14123006	上轴毡塞	1	1
33	115002013	上轴	Main shaft	1
34	H03001	GB/T894.1-1986挡圈15	Snap ring 15	1
35	115008001	电机防尘套	Motor dust jacket	1
36	S10005	GB/T80-1985螺钉M3×3(进口)	Screw M3×3	2
37	302830	手轮(喷漆)	Handwheel	1
38	S10009	螺钉	Screw	2
39	110233039	光电伺服电机	Motor	1
40	95111049	电机罩壳组件	Motor cover asm	1
41	S09022	螺钉M3 L=4	Screw M3 L=4	2
42	95100116	电机光栅组件（A2）	Motor grating sensor asm	1
43	195100324	电机转子总成	Motor rotor	1
44	S09113	螺钉M6 L=6	Screw M6 L=6	2
45	195100323	电机定子总成	Motor stator	1
46	95211058	电机绝缘防护罩	Motor insulation shield	1
47	951S15016	螺钉组合件M4 L=28	Screw asm M3 L=28	4
48	951S15010	螺钉组合件M5 L=20	Screw M5 L=20	3
49	114S13001	螺栓(内六角)M5 L=20	Screw M5 L=20	1

3

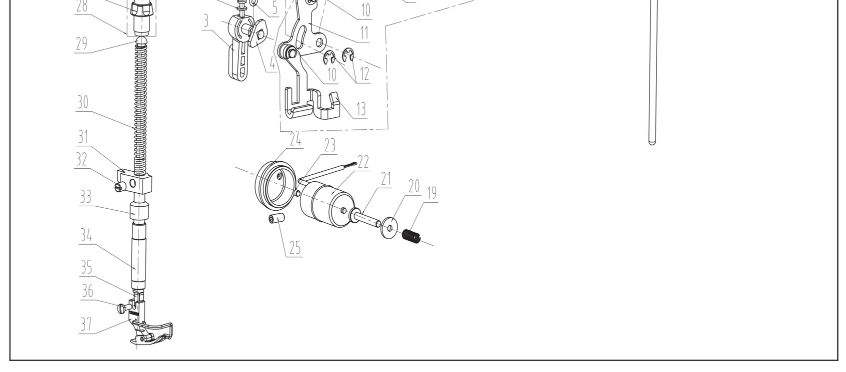

3. 压料、自动抬压脚部件/Presser Bar & Auto Lifter Components

序号NO.	公司件号 Part NO.	名称 PartName	零件描述 Description	数量 Number
1	101S11010	压脚扳手螺钉SM9/64"x40 L=11	Screw SM9/64"x40 L=11	1
2	10128002	压脚扳手螺钉垫圈	Washer	1
3	13811029	压脚扳手	Hand lifter	1
4	1411000200	压脚扳手凸轮分部件	Hand lifter cam asm.	1
5	O01004	O型圈	Rubber ring	1
6	101S20001	前杠杆螺纹销	Screw	2
7	10128015	螺纹销橡胶垫圈(厚)	Washer(H)	2
8	11501203000	抬压脚前杠杆组件	Knee lifter lever asm	1
9	14312012	抬压脚拉杆	Knee lifter pull rod	1
10	H05003	GB/T896-1986挡圈 5	Snap ring	2
11	1411201100	抬压脚前杠杆分部件	Lift front lever component	1
12	11329020	挡圈 5	Snap ring	2
13	114112028	压脚升降板	Lifting plate	1
14	101S20004	抬压脚拉杆螺钉SM3/16"x32	Hinge Screw SM3/16"x32	1
15	101S20003	后杠杆轴位螺钉SM15/64"x28	Hinge screw SM15/64"x28	1
16	115012050	抬压脚后杠杆	Knee lifter back lever	1
17	144S20003	抬压脚顶杆轴位螺钉SM3/16"x32	Hinge Screw SM3/16"x32	1
18	115012043	抬压脚顶杆	Knee lifter connecting rod	1
19	10127003	松线辅钉弹簧	Spring	1
20	10128001	松线辅钉垫片	Washer	1
21	114126003	松线辅钉	Thread release supporting pin	1
22	11503011500	松线电磁铁组件	Solenoid	1
23	12922015	橡皮塞	Spout plug	1
24	115022012	松线油封	Oil seal	1
25	113S14010	左销螺钉	Left pin screw	1
26	113811018	调压螺钉	Press regulating screw	1
	1138NS30003	调压螺钉(厚)	Press regulating screw (H)	1
27	13811028	调压螺母	Press regulating nut	1
	1138NS16005	调压螺母(厚)	Press regulating nut(H)	1
28	11381101800	调压螺钉组件	Presser regulating screw nut asm.	1
29	10102003	调压导杆	Press regulating guide bar	1
30	113827010	调压簧	Press regulating spring	1
	10127024	调压簧(厚)	Press regulating spring(H)	1
31	13809030	压杆导架	Presser bar guide bracket	1
32	101S15007	压杆导架螺钉 SM1/4"x40 L=8	Screw SM1/4"x40 L=8	1
33	10122112	压杆防油套	Pressure bar oil cover	1
34	113803007	压杆衬套	Presser bar bushing,lower	1
35	113802009	压杆	Presser bar	1
36	101S11009	活压脚螺钉 SM9/64"x40 L=10.5	Screw SM9/64"x40 L=10.5	1
37	1131600600	压脚组件	Presser foot asm	1
	1131600300	压脚组件(厚)	Presser foot asm(H)	1

4

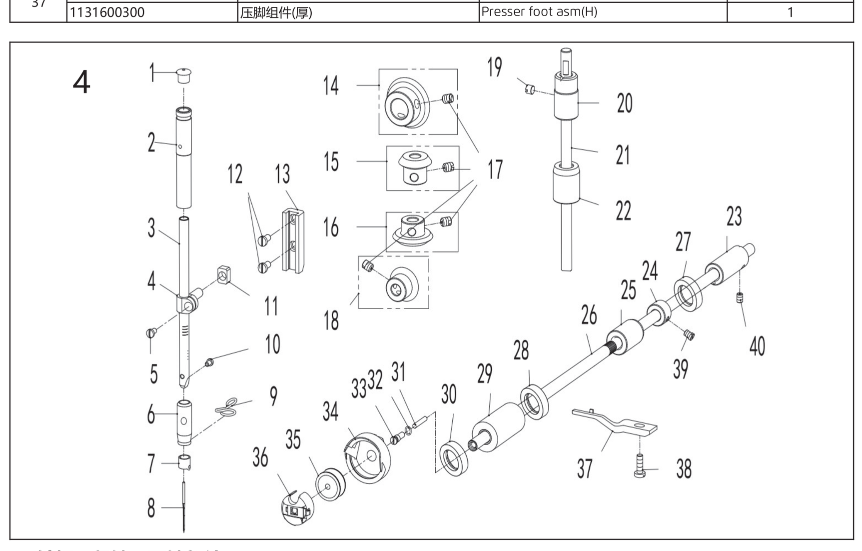

4. 针杆、竖轴、下轴部件/Needle bar & Upright Shaft & Hook Driving Shaft Components

序号NO.	公司件号 Part NO.	名称 PartName	零件描述 Description	数量 Number
1	10122013	针杆上衬套孔塞	Rubber plug	1
2	14103009	针杆上衬套	Needle bar bushing upper	1
	10103009	针杆上衬套 (厚料)	Needle bar bushing upper(H)	1
3	11402034	针杆	Needle bar	1
	10102021	针杆(厚料)	Needle bar (H)	1
4	10138002	针杆连接柱	Needle bar connecting rod	1
5	101S11005	螺钉 SM9/64"x40 L=6	Screw SM9/64"x40 L=6	1
6	10103010	针杆下衬套	Needle bar bushing lower	1
	11303023	针杆下衬套(厚料)	Needle bar bushing lower(H)	1
7	10113002	针杆线勾	Needle bar thread guide	1
	11412063	针杆线勾(厚料)	Needle bar thread guide(H)	1
8	10117001	机针DB×1 14#(日本风琴)	Needle	1
	10117002	机针DP×5#21(厚料)	Needle(H)	1
9	10413001	针杆下衬套线勾	Lower bushing thread guide	1
	10113009	针杆下衬套线钩(厚料)	Lower bushing thread guide(H)	1
10	104S11006	支针螺钉(进口) SM1/8"x44 L=4.5	Screw SM1/8"x44 L=4.5	1
11	10109001	针杆连接柱滑块	Slide block	1
12	101S11008	滑块导轨螺钉SM11/64"x40 L=8	Screw SM11/64"x40 L=8	2
13	10109002	针杆接头滑块导轨	Needle bar guide	1
14	10425004	上轴伞齿轮	Upper shaft bevel gear	1
15	10425003	竖轴上伞齿轮	Upper small bevel gear asm	1
16	10425002	竖轴下伞齿轮	lower large bevel gear asm	1
17	101S15014	齿轮螺钉SM1/4"x40 L=7	Screw SM1/4"x40 L=7	8
18	10425001	下轴伞齿轮	Hook drive shaft bevel gear	1
19	113S11036	一字开槽紧定螺钉SM15/64"x28 L=4.7	Screw SM15/64"x28 L=4.7	1
20	113803012	竖轴上轴套	Upright shaft bushing upper	1
21	115002008	竖轴	Upright shaft	1
22	113803004	竖轴下轴套	Upright shaft bushing lower	1
23	115003007	下轴后轴套	Hook driving shaft bushing back	1
24	115008002	下轴挡圈	Hook driving shaft snap ring	1
25	115003008	下轴中套	Lower shaft middle bushing	1
26	115002019	下轴	Hook driving shaft	1
27	11522001	油封组件12	oil seal 12	1
28	114122004	下轴前套油封(大)	oil seal	1
29	14003001	下轴前轴套组件	Hook driving shaft bushing front	1
30	115222012	下轴前套油封(大)	oil seal	1
31	13823001	下轴限油芯	Oil wick	1
32	141822002	O形圈3.6×0.8	Rubber ring 3.6×0.8	1
33	101S30005	下轴限油螺钉	set screw	1
34	11418003	广濑中厚料旋梭(扩大缝纫范围)	Hook asm (Hirose)	1
	11418004	广濑厚料旋梭(新)(有尾巴)	Hook asm(Hirose)(H)	1
35	10118003	梭心	Bobbin	1
36	11218504	梭壳	Bobbin case asm.	1
37	10112016	旋梭定位钩	Finger postioner	1
	10112032	旋梭定位钩(厚料)	Finger postioner(H)	1
38	116S11005	牙架曲柄螺钉SM11/64"x40 L=13	Screw SM11/64"x40 L=13	1
39	101S11012	下轴挡圈螺钉SM11/64"x40 L=4.8	Screw SM11/64"x40 L=4.8	2
40	113S14020	下轴后套螺钉SM11/64"x40 L=6	Screw SM11/64"x40 L=6	1

5

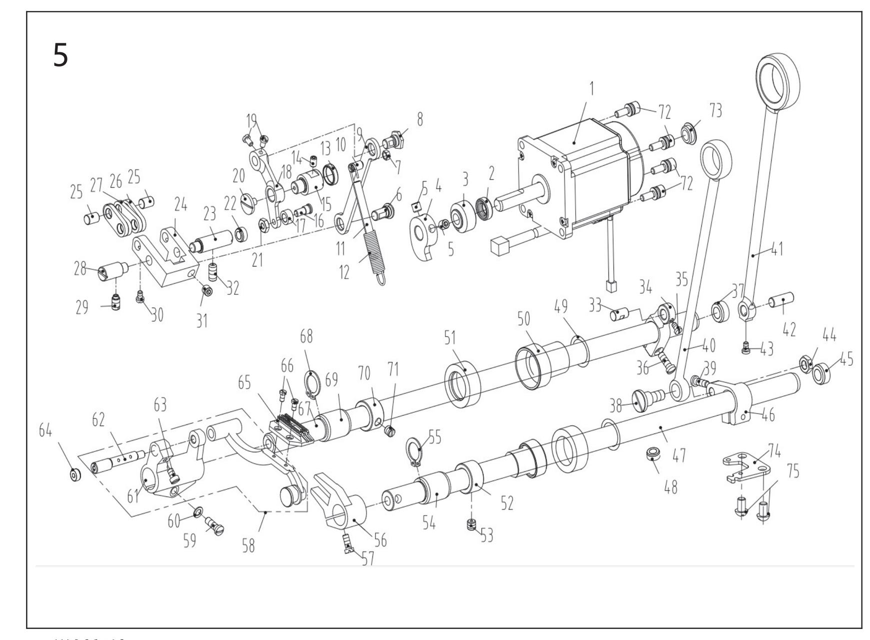

5. 送料部件/Feed Mechanism Components

序号NO	公司件号 Part NO	名称 PartName	零件描述 Description	数量 Number
1	115433002	步进电机（-5,-H、）	Stepper motor（Z,-H、-7）	1
	115033013	步进电机（-7）	Stepper motor（-7）	1
2	114922002	步进电机轴套油封Φ10×Φ16×5	Stepper motor bushing oil seal	1
3	115003002	步进电机轴套	Stepper motor bushing	1
4	115410003	针距凸轮（-7）	Needle pitch cam（-7）	1
5	S10118	螺钉M6 L=6	Screw M6 L=6	2
6	114926001	针距曲柄销	Needl gage crank pin	1
7	114S16004	螺母SM11/64"x40	Nut SM11/64"x40	1
8	115426001	针距曲柄销	Needl gage crank pin	1
9	115405001	针距调节连杆	Needle pitch adjusting link	1
10	114S30007	弹簧悬置螺钉	Spring mounting screw	1
11	11321005	油管	Tubing	1
12	115027008	针距拉伸弹簧（-5,-H、）	Pitch reset spring	1
	115427003	针距复位簧（-7）	Pitch reset spring（-7）	1
13	20628023	送料轴油封	Feed shaft oil seal	1
14	113S14010	左销螺钉	Screw SM3/16"×28 L=7	1
15	115426003	针距曲柄支撑销	Pitch crank support pin	1
16	136S20003	滚轮螺钉	Roller screw	1
17	13609002	滚轮	Roller	1
18	115404003	针距曲柄	Needl gage crank pin	1
19	101S11005	螺钉SM9/64"x40 L=6	Screw SM9/64"x40 L=6	2
20	101S11023	送料调节器轴端螺钉	Feed regulator shaft end screw	1
21	136S17005	滚轮螺母	Roller nut	1
22	14022015	孔塞11.5	Rubber plug	1
23	10126010	送料摆动板座右销	Right pin	1
24	114901001	送料摆动板座	Feed shaking plate	1
25	10126007	短摆动板连杆销	Connecting pin	2
26	11412022	送料短摆动板	Feed short shaking plate	2
	13809007	送料短摆动板(厚料)	Feed short shaking plate (H)	2
	11412022	送料短摆动板(-7)	Feed short shaking plate (-7)	2
27	13809008	送料长摆动板	Feed long shaking plate	2
28	10126009	送料摆动板座左销	Left pin	1
29	101S15010	左销螺钉SM15/64"×28 L=10.5	Screw SM15/64"x28 L=10.5	1
30	101S11005	螺钉SM9/64"x40 L=6	Screw SM9/64"x40 L=6	2
	114S11015	螺钉SM9/64"×40 L=6(厚料)	Screw SM9/64"x40 L=6(H)	2
31	101S14001	螺钉SM1/4"×40 L=6	Screw SM1/4"x40 L=6	1
32	113S14010	螺钉SM15/64"x28 L=12	Screw SM15/64"x28 L=12	1
33	10126011	送料曲柄销	Feed rocker crank pin	1
34	10104002	送料曲柄	Feed rocker shaft crank	1
35	101S11005	螺钉SM9/64"x40 L=6	Screw SM9/64"x40 L=6	1
36	101S11016	螺钉SM3/16"x28 L=14	Screw SM3/16"x28 L=14	1
37	114022002	抬牙送料轴后孔塞		1
38	101S20005	抬牙连杆轴位螺钉SM9/32"x28	hinge Screw SM9/32"x28	1
39	101S11016	螺钉SM3/16"x28 L=14	Screw SM3/16"x28 L=14	1
40	115405003	抬牙连杆	Connecting rod	1
41	115405002	送料连杆	Rocker shaft connecting rod	1
	115405004	送料连杆（-H、-7）	Rocker shaft connecting rod(-H、-7)	1
42	10126006	送料连杆销	Connecting rod pin	1
43	114S11015	割线刀螺钉SM9/64"×40 L=6	Screw SM9/64"x40 L=6	1
44	101S16003	抬牙连杆轴位螺母 SM9/32"x28	Hinge Screw SM9/32"x28	1
45	114022002	抬牙送料轴后孔塞		1
46	10104004	抬牙后曲柄	Feed driving shaft crank	1
47	115002016	抬牙轴	Feed driving shaft	1
48	14022008	送料轴油线孔塞	Plug	2
49	114022001	送料轴后轴套密封圈	Rubber ring	2
50	14003002	送料轴后轴套	Axle sleeve	2
51	1142200800	油封组件22	Oil seal	2
52	10108003	送料轴挡圈	Feed rocker shaft snap ring	1
53	101S15002	螺钉SM1/4"x40 L=6	Screw SM1/4"x40 L=6	2
54	10403015	轴套	Bushing	1
55	H03001	GB/T894.1-1986挡圈 15	Snap ring 15	1
56	115004006	抬牙叉形曲柄	Driving shaft crank	1
	113804011	抬牙叉形曲柄(厚料、-7)	Driving shaft crank (H、-7)	1
57	1138NS30004	抬牙叉形曲柄螺钉	Driving shaft crank Screw	1
58	11500700200	牙架座组件	Rack seat assembly	1
	11380700300	牙架组件(-H、-7)	Rack Assembly (-H、-7)	1
59	101S11016	螺钉SM3/16"x28 L=14	Screw SM3/16"x28 L=14	1
60	10128003	牙架座螺钉垫圈	Washer	1
61	480095	牙架座	Feed bar bed	1
62	10401007	牙架销(自制)	Feed bar pin	1
63	101S11025	螺钉SM11/64"x40 L=7	Screw SM11/64"x40 L=7	1
64	14022003	送料轴前孔塞	Spout plug	1
65	11414002	送料牙	Feed dog	1
	11314001	送料牙(厚料)	Feed dog (H)	1
	11414001	送料牙(-7)	Feed dog (-7)	1
66	101S11018	螺钉 SM1/8"x44 L=6	Screw SM1/8"x44 L=6	2
67	115002015	送料轴	Feed rocker shaft	1
68	H03001	GB/T894.1-1986挡圈 15	Snap ring 15	1
69	115003009	送料轴前轴套	Bushing	1
70	10108003	送料轴挡圈	Feed rocker shaft snap ring	1
71	101S15002	螺钉SM1/4"x40 L=6	Screw SM1/4"x40 L=6	2
72	1150NS13002	螺钉SM3/16"×28 L=15	Screw SM3/16"x28 L=15	4
73	10122003	面板调节孔螺塞	Rubber plug	1
74	13812081	拉簧固定板	Spring fixing plate	1
75	101S11026	螺钉SM15/64"x28 L=9	Screw SM15/64"X28 L=9	2

6

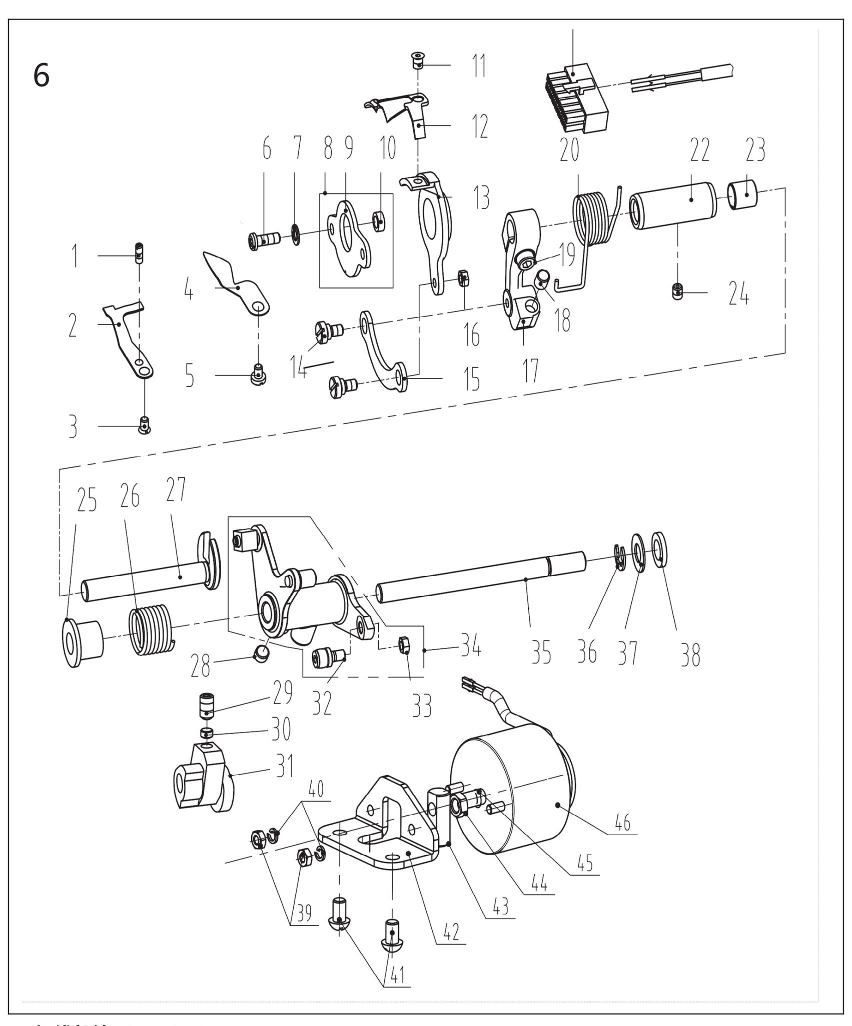

6. 切线部件/Thread Trimmer Components

序号NO	公司件号 Part NO	名称 PartName	零件描述 Description	数量 Number
1	113S15002	螺钉SM1/8"x44 L=9.5	Screw SM1/8"x44 L=9.5	1
2	115019001	定刀	Secant knife	1
3	113S17001	螺钉SM9/64"x40	Screw SM9/64"x40	1
4	113813029	分线片	Needle guard patch	1
5	125S11020	松线轴套螺钉	Screw SM9/64"x40 L=5.5	1
6	113S11001	螺钉SM11/64"x40 L=12	Screw SM11/64"x40 L=12	2
7	10128003	牙架座螺钉垫圈	Washer	2
8	14012004	刀架压板组件	Knife bracket press component	1
9	14012032	偏心连杆	Eccentric connecting rod	1
10	11303012	短套	Short bushing	2
11	113S17002	螺钉SM11/64"x40 L=4.4	Screw SM11/64"x40 L=4.4	2
12	14019004	活动刀(薄料短槽)	Motorial knife	1
	114119002	活动刀(厚料短槽)	Motorial knife(H)	1
13	11307001	剪线刀架	Knife bracket	1
14	113S20001	连杆螺钉SM11/64"x40	Hinge Screw SM11/64"x40	2
15	114112013	连杆	Connecting rod	1
16	114S16004	螺母SM11/64"x40	Nut SM11/64"x40	1
17	115004004	切线曲柄	Crank	1
18	115022003	驱动曲柄止动块	Crank driver stopper block	1
19	S05004	螺钉M5 L=14	Screw M5 L=14	1
20	11327001	弹簧	Spring	1
21	11230004	14孔接线器	Plug	1
22	11303003	切线轴套	Thread cutting shaft bushing	1
23	11503005	驱动曲柄轴衬套	Crank drive shaft bushing	1
24	113S14020	螺钉SM11/64"x40 L=6	Screw SM11/64"x40 L=6	1
25	11322002	扭簧端盖	Spring cover	1
26	11327002	弹簧	Spring	1
27	14104002	切线凸轮曲柄轴	Crank shaft	1
28	101S14001	上轴挡圈螺钉SM1/4"x40	Screw SM1/4"x40 L=6	1
29	116S14005	螺钉SM1/4"x40 L=10	Screw SM1/4"x40 L=10	2
30	113809009	凸轮顶柱	Push rod	2
31	11310004	剪线凸轮	Cam	1
32	11324001	滚柱	Roolling pin	1
33	1138NS16001	螺母SM11/64"x40	Nut SM11/64"x40	1
34	1130400500	剪线驱动组件	Thread trimmer drive asm.	1
35	11302002	轴	Shaft	1
36	H05013	GB/T896-1986挡圈6	Snap ring 6	1
37	10112003	针杆曲柄护板	Cunter weight protecting	1
38	11322003	电磁铁缓冲片	Solenoid cushion rubber	1
39	N01005	螺母 M4	Nut M4	2
40	W02018	弹簧垫圈 4	Washer	2
41	101S11026	螺钉SM15/64"x28 L=9	Screw SM15/64"X28 L=9	2
42	11312006	切线电磁铁支架组件	Bracket	1
43	11309001	切线电磁铁顶销	Solenoid pin	1
44	112S16006	螺母SM1/4"X40	Nut SM1/4"X40	1
45	113822005	电磁铁橡胶垫	Washer	1
46	11463000600	剪线电磁铁组件	Thread trimmer solenoid asm.	1

7

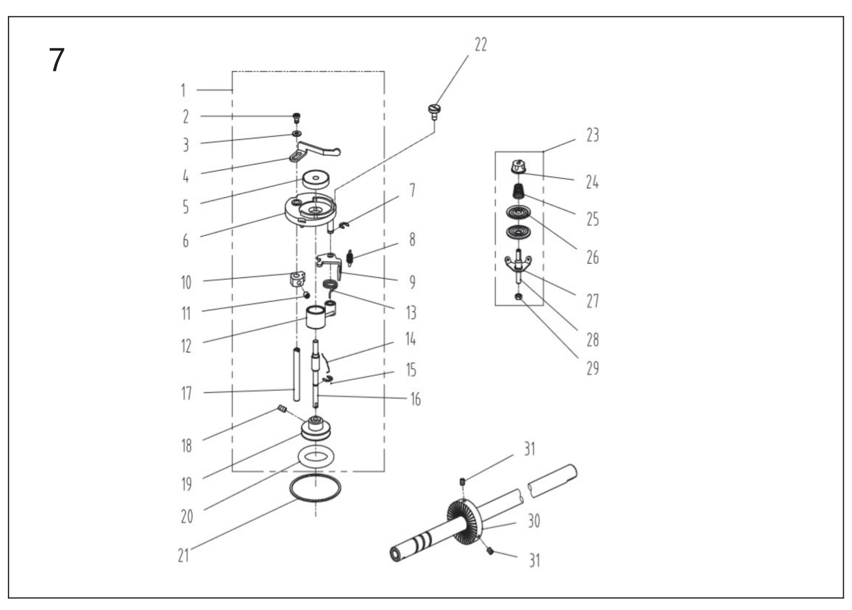

7. 绕线部件/ Bobbin Components

序号NO	公司件号 Part NO	名称 PartName	零件描述 Description	数量 Number
1	1383103900	绕线器组件	Bobbin winder asm	1
	1473100100	绕线器组件(HL)	Bobbin winder asm(HL)	1
2	114S11008	螺钉M4 L=6	Screw M4 L=6	1
3	W01142	垫圈4	Washer 4	1
4	10113030	压线控制板	Thread press control plate	1
5	10111120	绕线衬垫	Winding pad	1
6	13831101	绕线器装置主座	Bobbin winder bed	1
7	H05006	开口挡圈5	Snap ring 5	1
8	10127061	复位板拉簧	Spring	1
9	13812110	调节板	Regulating plate	1
10	10110030	绕线凸轮	Bobbin winder cam	1
11	S09045	螺钉M5 L=5	Screw M5 L=5	1
12	1380510600	绕线器连杆组件	Bobbin winder connecting rod	1
13	13827103	满线复位簧	spring	1
14	10127060	弹簧	Spring	1
15	GB/T 896-1986	开口挡圈4	Snap ring 4	1
16	13802111	绕线器主轴	Bobbin winder mian shaft	1
17	13802026	绕线凸轮轴	Bobbin winder cam shaft	1
18	S09103	绕线轮螺钉M4 L=4	Screw M4 L=4	2
19	13831102	绕线轮	Bobbin winder wheel	1
20	O01110	O型圈	Ring	1
21	11422062	密封垫	Washer	1
22	114S11003	螺钉SM3/16"×28 L=10	Screw SM3/16"×28 L=10	3
23	1411300600	底线夹线器	Bobbin thread tension asm	1
24	141S16019	夹线螺母	Thread tension nut	1
25	11427006	小夹线弹簧	Spring	1
26	14112015	夹线板	Thread tension disk	2
27	11413022	夹线过线板	Thread tension guide plate	1
28	112S13004	夹线螺钉	Screw	1
29	114S16001	螺母SM11/64"×40	Nut SM11/64"×40	1
30	11435013	绕线器驱动轮	Driving wheel	1
31	S10009	螺钉M6 L=8	Screw M6 L=8	2

8

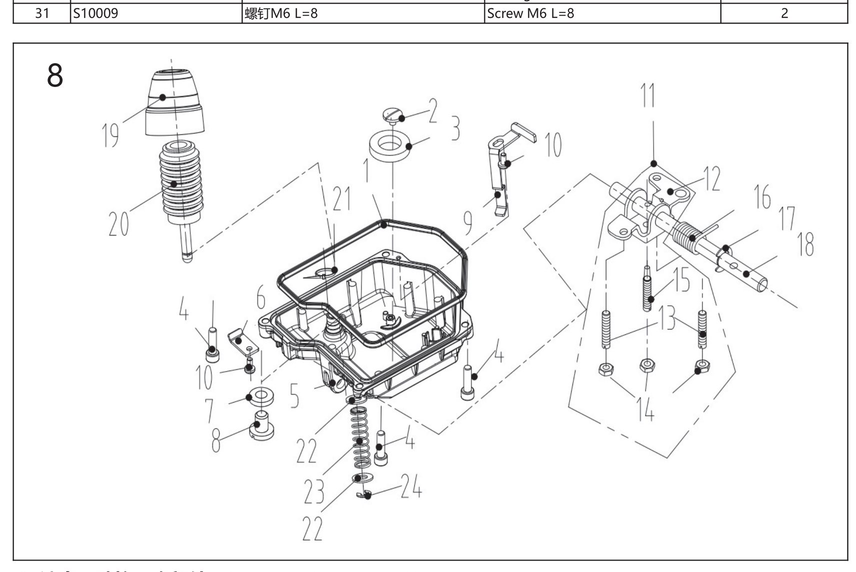

8. 油盘、膝抬压脚部件/Oil Ceservoir & Knee Lifter Components

序号NO.	公司件号 Part NO.	名称 PartName	零件描述 Description	数量 Number
1	115022010	油盘密封垫	Seal	1
2	101S11023	送料调节器轴端螺钉	Screw	1
3	10131001	油盘磁铁	Oil reservoir magnet	1
4	S05240	油盘固定螺钉M6x20	Screw M6 L=20	4
5	115001028	油盘	Oil reservoir	1
6	115212004	电线压板	Wire clamp	1
7	20528014	油盘放油垫圈	ring	1
8	207S13002	堵油螺钉	Screw	1
9	114112021	电线压板	Wire clamp	1
10	113S11004	松线导管压板螺钉M4x8	Screw M4x8	2
11	1401202700	抬压脚双向曲柄组件	Lifting foot bidirectional crank asm.	1
12	10112027	抬压脚双向曲柄	Knee lifter crank	1
13	S07020	双向曲柄限位调节螺钉M6 L=20	Screw M6 L=20	2
14	101S16004	双向曲柄限位调节螺母M6	Nut M6	3
15	101S12002	双向曲柄螺钉	Screw	1
16	14027016	双向曲柄扭簧	Knee lifter spring	1
17	H05010	GB/T896-1986挡圈9	Snap ring 9	1
18	11500201400	抬压脚轴组件	Knee lifter shaft	1
19	115022009	顶帽防护帽	Knee lifter push rod hat	1
20	114111012	顶帽组件	Knee lifter push rod	1
21	195413001	2×200耐高温扎带	Cable band	1
22	40128013	垫圈 6.2×13×1	Washer 6.2×13×1	2
23	14327002	顶帽弹簧	Knee lifter push rod Spring	1
24	H05012	开口挡圈4(日标)	Snap ring 4	1

9

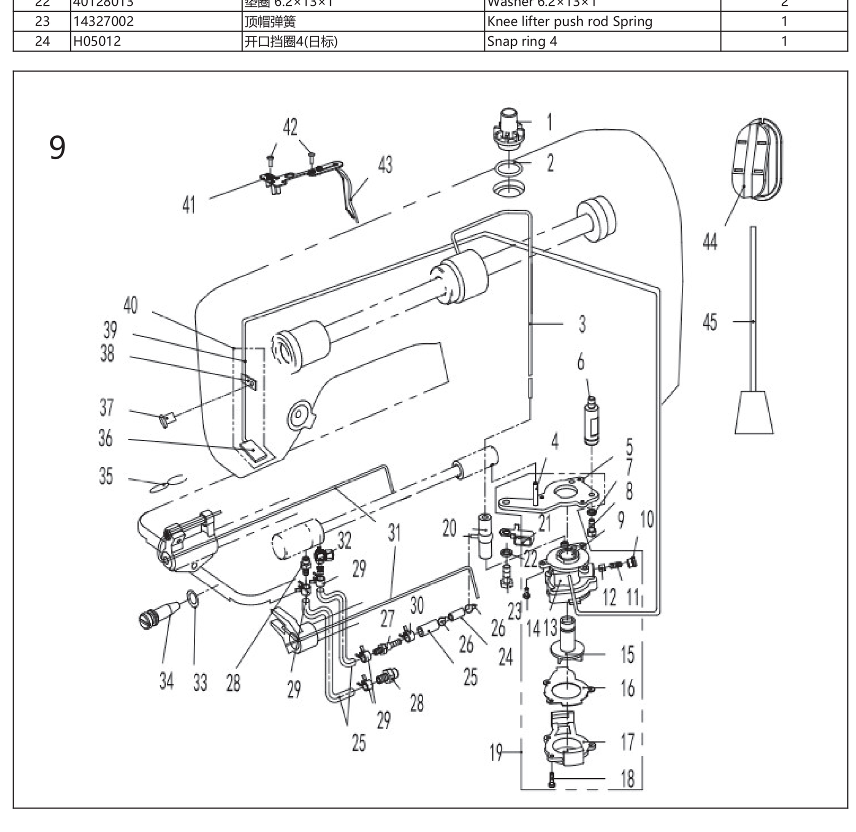

9. 润滑、油量检测部件/Oil Lublication & Oil Measuring Components

序号NO.	公司件号 Part NO.	名称 PartName	零件描述 Description	数量 Number
1	11211004	油窗	Oil sight window	1
2	10122019	油窗O形圈	Rubber ring	1
3	14121001	上轴供油管	Main shaft oil tube	1
4	10121001	下轴供油管	Hook driving shaft oil tube	1
5	10112020	油泵安装板	Oil pump installing base	1
6	101S30008	油泵连接螺柱	Oil pump connecting stud	1
7	W03002	弹垫	Spring washer	1
8	209S12001	压脚螺钉SM11/64 " ×40 L=10.5	Screw SM11/64 " ×40 L=10.5	1
9	10103022	油泵体衬套	Oil pump bushing	1
10	101S30007	柱塞螺钉	Plunger Screw	1
11	10127013	柱塞簧	Plunger spring	1
12	10122018	回油柱塞	Plunger	1
13	10120001	油泵体	Oil pump	1
14	S04093	油泵螺钉	Screw	3
15	10111003	油泵叶轮	Oil pump impeller	1
16	10112021	油泵叶轮托板	Oil pump impeller cover	1
17	10111007	油泵盖	Lubricating oil pump cover	1
18	101S30006	螺钉	Screw	3
19	1012000100	油泵组件	Lubricating oil pump component	1
20	10136001	供油管接头	Rubber joint	1
21	14112007	过线勾	Thread hook	1
22	W02004	GB/T93-1987弹垫M6	Spring Washer M6	1
23	116S30003	抬牙叉固定螺钉SM15/64"x28 L=14.5	Screw SM15/64"x28 L=14.5	1
24	14021003	铝油管	Aluminum tubing	1
25	14021001	PVC油管	Tubing	0.48m
26	113811004	尼龙扎带	Cable band	2
27	14036003	油盘油嘴	Oil nozzle	1
28	14036002	回油嘴	Oil nozzle	2
29	20429001	油管卡簧	Oil pipe clamp spring	4
30	30129007	油管卡簧	Oil pipe clamp spring	1
31	10123010	油线	Oil wick	2
32	115036001	油量调节接头	Oil nozzle	1
33	14022011	O型圈	Rubber ring	1
34	140S30001	油量调节螺钉	Oil volume adjusting screw	1
35	10127015	回油毡夹	Oil felt clamp	1
36	10123006	回油毡	Oil felt felt	1
37	101S11004	挑线杆护罩螺钉SM3/16"x28 L=7	Screw SM3/16"x28 L=7	1
38	10112023	回油管夹	Oil tube clamp	1
39	10121008	回油管	Oil return tube	1
40	10121007	回油管组件	Oil return tube component	1
41	10112025	油线固定板	Oil wick fixing plate	1
42	101S11010	压脚扳手螺钉SM9/64"x40 L=11	Screw SM9/64"x40 L=11	2
43	10123010	油线	Oil wick	1
44	13811015	油窗	Oil window	1
45	11412200200	浮标	Buoy	1

10

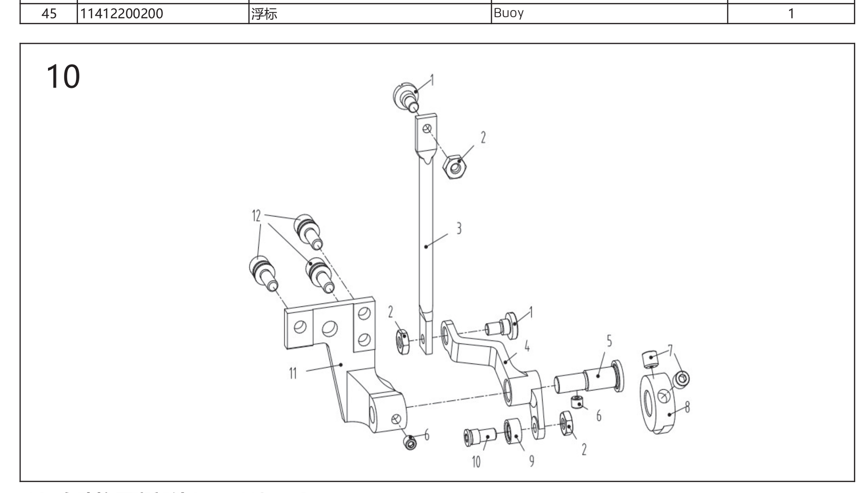

10. 自动抬压脚部件Auto Lifter Components

序号NO	公司件号 Part NO	名称 PartName	零件描述 Description	数量 Number
1	1150NS20001	抬压脚顶杆螺钉	Presser foot lifter screw	2
2	136S17005	滚轮螺母	Roller nut	3
3	115412001	自动抬压脚顶杆	Automatic presser foot lifter	1
4	115404002	抬压脚驱动曲柄	Driving crank of presser foot	1
5	115426002	抬压脚驱动曲柄销	Lifting presser foot to drive crank pin	1
6	S10014	螺钉M5 L=4	Screw M5 L=4	2
7	S10118	螺钉M6×0.75×6	Screw M6×0.75×6	2
8	115410002	抬压脚凸轮	Presser foot cam	1
9	13609002	滚轮	Roller	1
10	136S20003	滚轮螺钉	Roller screw	1
11	115401001	抬压脚曲柄支架	Crank bracket for presser foot lifting	1
12	1150NS13002	螺钉SM3/16"x28 L=10	Screw SM3/16"x28 L=10	3

11

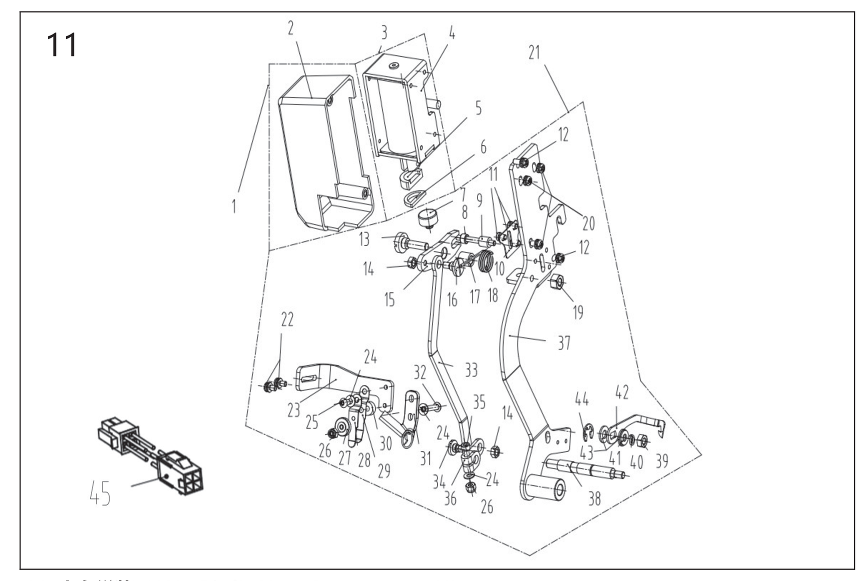

11. 少鸟巢装置/ No Bird's Nest Components (1)

序号NO	公司件号 Part NO	名称 PartName	零件描述 Description	数量 Number
1	11501203900	勾线装置组件	Wire laying device asm	1
2	14411003	罩壳	Shell	1
3	11503004300	拨线电磁铁组件	Dial the line electromagnet	1
4	/	拨线电磁铁	Dial the line electromagnet	1
5	14022026	橡皮垫	Rubber mat	1
6	14028020	缓冲垫片	Buffer gasket	1
7	14022027	橡皮垫块	Rubber pad	1

11. 少鸟巢装置/ No Bird's Nest Components (2)

序号NO.	公司件号 Part NO.	名称 PartName	零件描述 Description	数量 Number
8	14008001	滑动衬套	The sliding sleeve	1
9	115026014	拨线传动销	Dial the line drive pin	1
10	115028002	挡片	Block piece	1
11	201S11005	开槽圆柱头螺钉	Screw asm	3
12	S15011	螺钉组合件M3 L=8	Screw asm M3 L=8	2
13	140S20020	拨线传动板轴位螺钉	Dial the line drive board shaft screw	1
14	140S16007	拨线连杆轴位螺母	Dial the line connecting rod shaft nut	2
15	14012024	拨线传动板	Dial the line drive board	1
16	140S20021	拨线连杆轴位螺钉	Dial the line connecting rod shaft scre	1
17	14003008	复位衬套	Reset the bushing	1
18	14027020	复位弹簧	Reset spring	1
19	140S16008	拨线传动板轴位螺母	Dial the line shaft drive plate a nut	1
20	S15010	螺钉组合件M3 L=6	Screw asm M3 L=6	3
21	11501203800	勾线支架组件（含吸嘴）	Hook bracket asm (including suction nozz	1
22	S15010	螺钉组合件M3 L=6	Screw asm M3 L=6	2
23	14012021	压片支架	Tablet bracket	1
24	W01099	平垫圈3	Wwasher 3	2
25	S17885	螺钉M3 L=6	Screw M3 L=6	1
26	N08004	螺母M3	Nut M3	1
27	N06013	滚花螺母3	Knurl nut M3	1
28	14013011	压片	Tablet	1
29	14013010	滑压片	Sliding tablet	1
30	14022025	橡胶圈	Rubber ring	1
31	14011005	吸嘴	Suction nozzle	1
32	S17886	螺钉M3 L=16	Screw M3 L=16	1
33	115012035	拨线连杆	Dial the line connecting rod	1
34	1141NS20002	拨线连杆轴位螺钉	Dial the line connecting rod shaft Scre	1
35	S05973	螺钉M3 L=14	Screw M3 L=14	1
36	14012023	拨线驱动连杆	Line drive connecting rod	1
37	11501203400	拨线电磁铁支架组件	Dial the line electromagnet stent compon	1
38	14002008	拨线驱动轴	Line drive shaft	1
39	N01110	螺母M4	Nut M4	1
40	W02018	弹簧垫圈4×0.8	Spring washer 4×0.8	1
41	W01097	平垫圈4	Wwasher 4	1
42	14013009	线勾	Wire hook	1
43	W01098	垫圈5×1	Washer 5×1	2
44	11329020	开口挡圈5	Open ring	1
45	115011009	吸风装置转接线	Suction device adapter	1

12

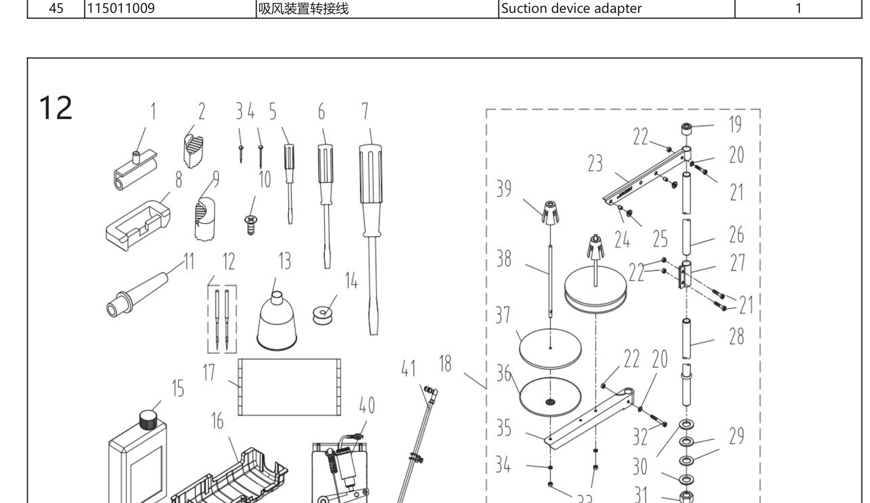

12. 机头附件/Machine Head Accessories

序号NO.	公司件号 Part NO.	名称 PartName	零件描述 Description	数量 Number
1	1011203100	机头连接钩部件	Hinge component	2
2	14022022	机头座垫	Die cushion	2
3	101S30010	机头连接钩座钉P19	Nail P19	2
4	1141NS30001	机头连接钩座钉P25	Nail P25	4
5	10131004	螺丝刀（小）	Screw driver,small	1
6	10131003	螺丝刀（中）	Screw driver,medium	1
7	20731047	螺丝刀（大）	Screw driver,large	1
8	10122060	机头连接钩座	Head connecting rubber cushion	2
9	14022023	机头支架	Nose support	2
10	101S30014	木螺钉M4×20	Wood screw M4×20	6
11	115011003	机头支柱	Machine head rest pin	1
12	10117001	机针（定位14#）	Needle	4
	10117002	机针DP×5#21（厚料）	Needle(H)	4
13	20131039	漏斗	Funnel	1
14	10118003	梭心	Bobbin	2
15	1381101200	油壶组件	Oiler component	1
16	115211002	油盘托盘	Disk tray	1
17	114131001	防尘罩	Dust cover	1
18	11023100400	线架组件	Thread stand asm.	1
19	20131019	线架杆顶防护橡皮	Spool rest rod rubber cap	1
20	W01047	平垫圈5	Washer 5	2
21	S04050	六角螺栓M5×16	Screw M5×16	1
22	N01034	六角螺母M5	Nut M5	4
23	13831022	上线架过线杆	Spool rest arm upper	1
24	10113011	过线圈（内）	Thread guide ring	2
25	10113010	过线圈（外）	Thread guide ring	2
26	13831019	线架杆上节	Spool rest rod upper	1
27	13831021	线架杆接头	Spool rest rod joint	1
28	13831020	线架杆下节	Spool rest rod lower	1
29	10122106	橡胶垫圈	Spool rest rod rubber ring	2
30	W01052	平垫圈16	Washer 16	2
31	N02004	六角薄螺母M16×1.5	Spool rest rod nut M16×1.5	1
32	S04051	六角螺栓M5×31.5	Screw M5×31.5	1
33	N01034	六角螺母M5	Nut M5	2
34	W03002	弹簧垫圈 5	Spring washer 5	2
35	13831023	下线架过线杆	Spool rest arm lower	1
36	13831024	线盘	Spool rest	2
37	20131010	线盘垫	Spool rest cushion	2
38	20131006	线托棒	Spool pin	2
39	13831025	线团防松垫	Spool retainer	2
40	11023002800	塑壳调速器(平缝A2)	Molded case governor (flat joint A2)	1
41	11543100300	拉杆组件	Tie rod assembly	1

公司地址(Address of Company)：
中国浙江省台州市椒江区三甲东海大道东段1008号
NO.1008，DONGHAI AVENUE EAST，JIAOJIANG DISTRICT,TAIZHOU CITY，ZHEJIANG
邮编(Zip Code)：318000
国内销售部(Domestic Trade Department)：
电话(TEL)：0086-0576-88177788 88177789
传真(FAX)：0086-0576-88177758
国贸部(International Trade Department)：
电话(TEL)：0086-0576-88177782 88177774
传真(FAX)：0086-0576-88177787
服务热线：400-8876858
http://www.chinajack.com

请您扫下杰克服务号

www.chinajack.com

资料如有更改，恕不另行通知，以实物为准。
You will be not informed if the file has been revised.Please set sample as standard.

日期：2023.05

JACK 杰克
快速服务100%

A5E-A 电脑高速平缝机系列
A5E-A Direct Drive Power Operation Manual

使用说明和零件样本下载地址：
PLEASE DOWN LOAD THE MANUAL AND SPARE PARRTS FROM THE FOLLOWING WEBSITE:
ÇãÑÌÇÁ Êfåêä ãÊêÈ ÇäÊÙäêåÇÊ èâXÙ ÇäÊÈÏêä åæ Çääåèâ ÇäÊÇäê:
POR FAVOR DESCARGAR EL MANUAL Y LIBRO DE PARTES Y REPUESTOS LO SIGUIENTE EN SITIO WEB:
Пожалуйста, загрузите инструкцию по эксплуатации и деталировку（список запасных частей）со следующего вебсайта:
http://download.chinajack.com
产品标准代号：QB/T2380-2013
Standard code of the products: QB/T2380-2013

杰克缝纫机
JACK SEWING MACHINE
HTTP://WWW.CHINAJACK.COM

杰克科技股份有限公司
JACK Technology CO.,LTD.
• **公司地址**（Address of Company）：
中国浙江省台州市椒江区三甲东海大道东段1008**号**
NO.1008 , DONGHAI AVENUE EAST
JIAOJIANG DISTRICT,TAIZHOU CITY , ZHEJIANG
邮编：318000
• **国内销售部**（Domestic Trade Department）：
电话（TEL）：0086-0576-881177788 88177789
传真（FAX）：0086-0576-881177758
• **国贸部**（International Trade Department）：
电话（TEL）：0086-0576-881177782 88177774
传真（FAX）：0086-0576-881177787
• **免费售后服务电话：**400-8876858
http://www.chinajack.com

• **资料如有更改，恕不另行通知，以实物为准。**
You will be not informed if the file has been revised.Please set sample as standard.

使 用 说 明
Operation Manual

开车前的注意事项:
BEFORE OPERATION :

1.油盘内未加油绝不能开车。
2.机器运转时，从手轮外侧看转向应为逆时针方向。注意，不能倒转。
3.确认电控标识上的电压及相位是否正确。
1.Never operate the machine unless its oil reservoir has been filled with oil.
2.After setting up the machine,check the direction of motor rotation.To check it,turn the hand wheel by,hand to bring the needle down,and turn the power switch ON while observing the hand wheel.(The hand-wheel should turn counterclockwise as observed from the hand wheel side)
3.Confirm that the voltage and phase(single or 3-phase)are correct by checking them against the ratings shown on the electronic identification.

使用注意事项:
OPERATION PRECAUTIONS:

1.接通电源开关或机器运转时，请勿将手放到针的下部。
2.机器运转时，请勿将手指伸入挑线杆护罩内。
3.机头翻倒时，一定要切断电机开关。
4.操作者离开机器时，必须切断电源。
5.机器运转期间，注意不允许任何人的头或手以及任何东西靠近绕线轮和手轮。
6.装拆防护罩，或者其他保护装置时，请勿开动机器。
7.不要用香蕉水等油漆稀释剂擦洗机头表面。
1. Keep your hands away from the needle when you turn the power switch ON or while the machine is operating.
2. Do not put your finger into the thread take-up-lever while the machine is operating.
3. Be sure to.turn the power switch OFF before tilting the machine head.
4. When an operator leaves from the machine ,make sure to turn off the power.
5. During operation,be careful not to allow your or any other person’s head or hands to come close to the bobbin winder or hand wheel.Also,do not piece anything close to them.Doing so may be dangerous.
6.If your machine is provided with a finger guard or any other protectors,do not operate your machine with any of them removed.
7. Don’t clean the face of machine head with thinner .

1.规格/SPECIFICATIONS

用途	一般布料、薄料、中厚料	中厚料、厚料
缝纫速度	最高4,000rpm	最高3,500rpm
最大针脚长度	5mm	
机针	DBx1 #9~#18 (14#)	DPx5 #20~#23 (#21)
压脚高度（自动抬压脚）	9mm（标准）12mm（最大）	9mm（标准）12mm（最大）
使用机油	New Defrix Oil NO.10机油	

Application	General fabrica,light-weight and mdeium-weight materials	Mdeium-weight materials, Heavy-weight materials
Sewing speed	Max. 4,000rpm	Max. 3,500rpm
Max.Stitch length	5mm	
Needle	DBx1 #9~#18 (14#)	DPx5 #20~#23 (#21)
Presser foot lift	9mm (standard) ;12mm	9mm (standard) ;12mm (Max.)
Lubricating oil	New Defrix Oil NO.10	

2.缝纫机的安装/INSTALLATION

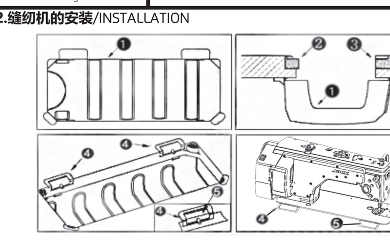

(1) 油盘托盘安装
1)将油盘托盘①安装在台板背面。
2) 将油盘支架③和油盘座垫②分别安装在台板上，如图所示,安装时要确保两个油盘支架③朝向操作者一边,两个油盘座垫②是在有机头连接钩⑤的那一侧。
3) 先将机头连接钩座④安装在台板上,再将机头连接钩⑤放入底板孔内,最后将机头放置于台板上,且机头连接钩⑤要与台板上的机头连接钩座④相嵌合。

(1)The installation of plastic reservoir
1) Install the plastic reservoir①under the stand & table.
2) Put the machine holder③and the machine cushion②on the stand & table.As is shown in the chart, making sure that the two oil holders③are pointing to the operator during the installation and the two oil pan cushions② are on the side which is with machine head connecting hook⑤.
3) Install the machine head connecting hook base ④ on the stand & table, and then put the machine head connecting hook ⑤ in the baseplate hole, at last,put the head on the stand table, making sure machine head connecting hook ⑤ is nested in the machine head

3.膝动提升高度的调整/ADJUSTING THE HEIGHT OF THE KNEE LIFTER

1) 膝动提升的标准高度为10mm。
2) 调节膝动提升调节螺丝①可以把压脚高度最大调整到13mm。
3) 压脚提升到10mm以上时，请注意针杆②的前端下降到最底下，不能碰到压脚 ③ 。
1) The standard height of the presser foot lifted using the knee lifter is 10mm.
2) You can adjust the presser foot lifted up to 13mm using knee lifter adjust screw ① .
3) When you have adjusted the presser foot lift to over 10mm,be sure that the bottom end of needle bar ② in its lowest position does not hit presser foot ③ .

4.加油/LUBRICATION

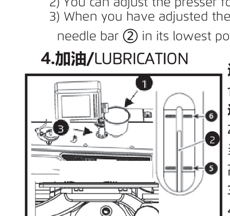

运转缝纫机之前，请注入375mL New Defrix No.10**机油**
1) **请保持缝纫机为开机状态，取下机臂上部的橡胶栓，利用漏斗①进行加油。**
2) **加油量请从机器油窗②处进行观察确认。**
当油盒内机油不够正常运行时，请适当加油，注意最低位⑤(红线)最高位⑥(蓝线).过最高位⑥(蓝线)有可能出现溅油现象，请加以注意。
3) **加油后运转缝纫机，如果润滑正常，可通过油窗③看到油的流动。**
4) **油量调节螺钉④左旋，旋梭油量减少；右旋，旋梭油量增加。**
※ **油流动量的多少，与油量的多少无关。**
※ 新机器使用1个月后请更换机油，后期每六个月更换机油。

Before the machine operation,please inject 375mL New Defrix No.10 oil
1) Please keep the sewing machine open, take off the rubber plug on the upper arm , and use a funnel ①to add oil.
2) Please observe and confirm the amount of oil added from the oil window ② of the machine. when the machine oil cannot ensure the normal operation of the machine, please add oil appropriately, and pay attention to the lowest level⑤(red line) and highest level⑥(blue line). If the oil exceeds the highest level⑥(blue line), there may be oil leakage. Please pay attention.
3) Running the machine after adding oil, if it's normal of lubrication, we can see the oil flow through the window③ .

4)The oil quantity of rotating shuttle decreases when the oil quantity adjusting screw ④is left-handed.The oil quantity of rotating shuttle increases when the oil quantity adjusting screw is turned right.
※ Note that the amount of the splashing oil is unrelated to the amount of the lubricating oil .
※ The new machine should be replaced after 1 month, and the oil should be replaced every six months later.

新缝纫机或较长时间没有使用的缝纫机在使用之前，应进行10分钟2500-3000rpm的磨合运转。

When you first operate your machine after seter or after an extended period of disuse, run your machine at 2,500 to 3,000 rpm .for about 10 minutes for the purpose of break-in.

5.**上线的穿线方法/**THREADING THE MACHINE HEAD

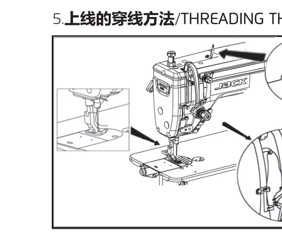

6.**机针与旋梭的关系/**NEEDLE-TO-HOOK RELATIONSHIP

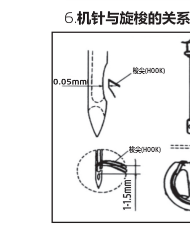

（1）针与旋梭的配合关系应如下：
1）转动手轮，使针杆位于最低点，在旋松针杆连接柱定位螺钉。
* 针杆高度的确定。
2）拉动针杆，水平透过内梭内边缘可看到针孔有1/2下露（机针必须安装到位）。机针槽线槽朝左，然后旋紧针杆连接柱螺钉。
* 旋梭位置的确定
3）先将旋梭梭尖朝上，转动手轮，针杆从最低点回升时，观察旋梭与机针配合关系。当旋梭梭尖位于机针孔边上端1-1.5mm时且梭尖平面距机针短槽平面0.05mm时（保证梭尖位于机针的中心线部位），旋紧旋锁螺钉。

(1) Adjust the timing between the needle and the hook as follow:
1) Turn the hand wheel to bring the needle bar down to the lowest point of its stroke,and loosen setscrew.
* Adjusting the needle bar height
2) Pull the needle bar,you can see the pinhole basset 1/2 level through edge of inside hook(needle must be position). Turn needle cover wire slot left,then tighten setscrew.
* Adjusting position a of the hook
3)First move the point of hook in direction, when running strap pulley needle bar risen from the lowest,Observe cooperate relation of the hook and needle.When hook point above Pinhole about top of 1mm to 1.5mm and when plane of the hook point form plane of needle short bar 0.05mm(keep the align hook blade point with the center of needle),tighten the hook setscrews.

注意
若间隙太小，会磨损梭尖，若间隙太大，则会引起跳针；
旋梭原来用的什么型号，调换后，也请使用原来的型号；
更换机针后注意机针必须安装到位且类型相同，如不同类型机针须检查配合关系。
*Precaution
If the clearance is too small,the tip of the hook will be abraded.
If it is too big,it will lead to skip over.
*Note that the type of hook to be substituted for,when replacing the hook.Shall be in conformity with the very type of the hook installed in the sewing machine of original assemblage.
After replacing the needle.the needle must be same type and install right position.If the needle is different type need check match with relation.

7. **缝线张力**/THREAD TENSION

（1）面线张力的调节：
1）根据不同的缝制条件，用螺母①来调整面线张力。
2）若把螺母①按顺时针方向(即A方向)转动时，面线张力将增大。
3）若把螺母①按逆时针方向(即B方向)转动时，面线张力将减小。
（2）底线张力的调节：
1）将夹线螺钉②朝顺时针方向(即C方向)转动时，底线张力将增大。
2）将夹线螺钉②按逆时针方向(即D方向)转动时，面线张力将减小。

(1)Adjusting the needle thread tension
1)Adjust the needle thread tension using tension ad just nut ① according to the sewing specifications.
2)As you turn nut ① clockwise(in direction A),the needle thread tension will increase.
3)As you turn nut ① counterclockwise(in direction B),the tension will decrease.
(2)Adjusting the bobbin thread tension
1) As you turn tension adjust screw ② clockwise(indirection C),the bobbin thread tension will increase.
2)As you run screw ② counterclockwise(in direction D),the bobbin thread tension will decrease.

8.踏板压力和行程/PEDAL PRESSURE AND PEDAL STROKE

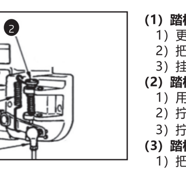

（1）踏板踩踏压力的调整
1）更换踩踏弹簧①的位置，可调整踩踏压力。
2）把弹簧挂到左侧之后，压力变轻。
3）挂到右侧之后变重。
（2）踏板回踩力的调整
1）用踏板回踩压力调节弹簧②可以调整。
2）拧进调节螺丝则压力变大。
3）拧松调节螺丝则压力变小。
（3）踏板踩踏行程的调整
1）把连接杆③插到右侧的孔里之后行程变大。

(1)Adjusting the pressure required to depress the front part of pedal
1)This pressure can be changed by changing the mounting position of pedaling pressure adjust spring ① .
2)The pressure decreases when you hook the spring on the left side.
3)The pressure increases when you hook the spring on the right side.
(2)Adjusting the pressure required to depress the back part of the pedal
1)This pressure can be adjusted using regulator screw ② .
2)The pressure increases as you turn the regulator screw in .
3) The pressure decreases as you turn the screw out.
(3)Adjusting the pedal stroke
1)The pedal stroke increases when you insert connecting rod ③ into the right hole.

9.踏板的调整/ADJUSTMENT DF THE PEDAL

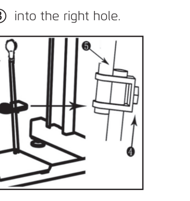

(1) 连接杆的安装
1)向箭头方向移动踏板调节板③，让连接杆球形头①和连接杆②成一直线。
(2) 踏板的角度
1)调节连杆的长度就可以自由的改变踏板的倾斜度。
2)拧松调节螺丝④，拉出插入连接杆⑤进行调整。
(1) Installing the connecting rod
1)Move pedal ③to the right or left as illustrated by the arrow so that spherical head ①and connecting rod ②are straightened.
(2) Adjusting the pedal angle
1)The pedal tilt can be freely adjusted by changing the length of the connecting rod.
2)Loosen adjust screw④,and adjust the length of connecting rod⑤.

10.触键手动倒缝(盒式)/
ONE-TOUCH TYPE REVERSE FEED STITCHING MECHANISM

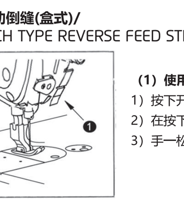

（1）使用方法
1）按下开关按钮①，缝纫机立即倒缝。
2）在按下的时间内进行倒缝。
3）手一松开立即变为正向缝纫。

(1)How to operate
1)The moment switch button ① is pressed,the machine performs reverse feed stitching.
2)The machine performs reverse feed stitching as long as the switch lever is held depressed.
3)The machine resumes normal feed stitching the moment the switch lever is released.

11.挑线簧/THREAD TAKE UP SPRING

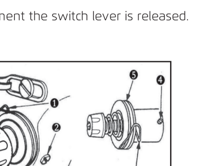

（1）改变挑线簧 ① 的摆动量：
1）旋松定位螺钉 ② 。
2）把夹线螺钉③朝② 顺时针方向（即A方向）转动时，挑线簧的摆动量将增大。
3）把夹线螺钉朝逆时针方向（即B方向）转动时，挑 线簧的摆动量将减小。
（2）改变挑线簧①的张力：
1）旋松定位螺钉②，取出夹线器（组件）⑤ 。
2）旋松定位螺钉④，并转动夹线螺钉③。
3）把夹线螺钉③朝顺时针方向（即A方向）转动时，挑线簧张力将增大。
4）把夹线螺钉③朝逆时针方向（即B方向）转动时，挑线簧张力将减小。
(1)Changing the stroke of thread take-up spring ①
1) Loosen setscrew② .
2)As you turn tension post ③ clockwise (in direction A),the stroke of thread take-up spring will be increased.
3)As you turn the knob counterclockwise (in direction B),the stroke will be decreased.
(2)Changing the pressure of threads take-up spring①
1)Loosen setscrew ② ,and take out tension asm ⑤ .
2)Loosen setscrew ④ ,and remove tension post ③ .
3)As you turn tension post ③ clockwise(in direction A),the pressure will be increased.
4)As you turn the post ③ counterclockwise(in direction B),the pressure will be decreased.

12少鸟巢功能/ Less bird's nest

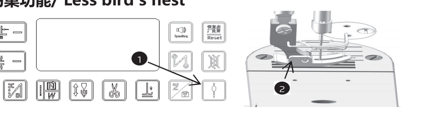

（1）机器开启后，点击①实现少鸟巢功能的开启和关闭；
（2）在开始缝纫后，夹住的线头在缝纫过程中多次无法割断后需要更换相匹配的压脚②。
(1) After open the machine , press to ① achieve the function for the bird's nest of opening and closing.
(2) After the start sewing, the thrum of the clamp cannot be cut off many times in the process of sewing ,then you need to change the matched presser foot ② .

13多国语言快捷切换/

长按语音按键，通过按加速或减速键切换参数号。切换参数时提示对应语言“语言功能开”，界面参数和语言名称如下表所示：

0	1	2	3	4
英语	西班牙语	葡萄牙语	俄罗斯语	阿拉伯语
5	6	7	8	9
越南语	波斯语	孟加拉语	土耳其语	印尼语
10	11	12	13	
波兰语	意大利语	泰语	乌克兰语	

Long press the voice button and switch the parameter number by pressing Speed or Speed pressing. When switching parameters, prompt the corresponding language "language function is open". The interface parameters and language names are shown in the following table:

0	1	2	3	4
English	Spanish	Portuguese	Russian	Arabic
5	6	7	8	9
Vietnamese	Persian	Bengali	Turkish	Indonesian
10	11	12	13	
Polish	Italian	Thai	Ukrainian	

工业缝纫机安全使用注意事项：
1.必须遵守基本措施；
2.必须经过专业培训，对缝纫机设备性能有所了解；
3.使用前应检查所有安全装置；
4.在安装机针、更换机针、压脚、针板、送布牙、弯针、旋梭或修理时，应立即关闭电源；
5.离开缝纫机或工作场所时应关闭电源；
6.使用离合马达时，要等待马达完全停止后再进行；
7.缝纫机及附属装置使用的机油，润滑油等液体流入眼睛或沾到皮肤上应立即清洗；
8.禁止用手触摸缝纫机通电时的零件或装置；
9.有关工业用平缝机与包缝机的修理、改造、主要机构的调整由专门技术人员来进行；
10.一般的维修保养由专人进行；
11.在电气方面的修理应在电气技术员的监督和指导下进行；
12.缝纫机使用期间应定期清扫；
13.为了正常安全运转，应安装地线，同时应在不受高频焊接机等强噪声源影响的环境下使用；
14.电源插头应由专人安装；
15.工业用平缝机、包缝机在指定用途以外不能使用。

环保要求：
1、使用过程中产生的废油及其他废弃物请根据当地环保的要求进行合理的处置。
2、请在使用完后及时关闭电源，减少电能的消耗。
3、请在说明书要求的电压及环境下使用，已延长产品的使用寿命，减少废弃物的产生。
4、机器报废后请勿将本机器及附件作为普通的生活垃圾处理。请遵守本设备及其附件处理

Notes for safe use of industrial sewing machines：
1. Basic measures must be observed.
2. Pass the specialized training and master sewing machine equipment performance.
3. All safety devices should be checked before use.
4. When installing needle, and changing needle, presser foot, plate, feed dog , bent needle, hook or repairing, the power supply should be turned off immediately.
5. Power should be turned off when leaving the sewing machine or workplace.
6. When using the clutch motor, please wait until the motor stops completely.
7. The machine oil and other liquids used in sewing machines and ancillary devices should be cleaned immediately when they are put into eyes or touch skin.
8. Do not touch the parts or devices when the machine is powered by hand.
9. The repair, renovation and adjustment of the main mechanisms of the relevant industrial sewing machines and overseers shall be carried out by specialized technicians.
10. General maintenance is carried out by specially-assigned persons.
11. Electrical repairs should be performed under the supervision and direction of the electrical technician.

12. The machine should be cleaned regularly during operation.
13. In order to operate normally and safely, ground lines should be installed, and they should be used in an environment free from strong noise sources such as high frequency welding machine.
14. Power plug should be installed by specially-assigned person.
15. Industrial lockstitch sewing machine and overlock sewing machine can not be used except the designated use.

Environmental requirements：
Please dispose the waste oil and other waste products properly according to local environmental protection requirements.
Please turn off the power after use to reduce power consumption.
Please use under the voltage and environment required in the manual to extend the service life of the product and reduce waste generation.
4、Do not treat the machine and its accessories as ordinary household garbage after being scrapped. Please comply with local laws governing the disposal of the equipment and its accessories and support recycling operations.

A5E-A 电控使用说明书

安全事项
• 在使用本产品之前，请先阅读《产品说明书》及所搭配的缝纫机机械说明书。
• 本产品必须由接受过专业培训的人员来安装或操作。
• 请尽量远离电弧焊接设备，以免产生的电磁波干扰本控制器而发生误动作。
• 请不要在室温45°以上或者0°以下的场所使用。
• 请不要在湿度30%以下或者95%以上或者有露水和酸雾的场所使用。
• 安装控制箱及其他部件时，请先关闭电源并拔掉电源插头。
• 为防止干扰或漏电事故，请做好接地工程，电源线的接地线必须牢固的与大地有效连接。
• 所有维修用的零部件，须由本公司提供或认可，方可使用。
• 在进行任何保养维修动作前，必须关闭电源并拔掉电源插头。控制箱里有高压危险，必须关闭电源五分钟后方可打开控制箱。

1 产品安装
1.1 产品规格

电源电压	AC 220±20% V AC 110±20% V
电源频率	50Hz/60Hz
额定输出功率	550W

1.2 接口插头的连接
将脚踏板及机头的各连接插头安插到控制器后面对应的插座上，各插座名称如图1-2-2所示，连接好，请检查插头是否插牢。

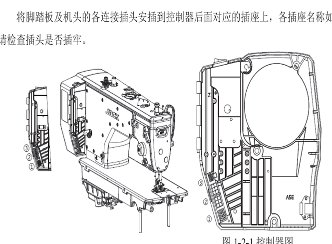

图 1-2-1 控制器图
① 脚踏板&升级插座
② 电磁铁、LED 灯、机头按键插座
③ 吸风装置接口

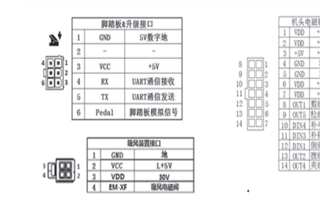

图 1-2-2 控制器接口定义
注：使用正常力量插不进去时，请检查插头与插座是否匹配，插入方向或针的方向是否正确！

1.3 接线与接地
必须要做好系统的接地工程，请合格的电气工程人员予以施工。产品通电及投入使用前，必须确保电源插座AC输入端已安全可靠的接地。系统的接地线为黄绿线，该地线请务必可靠连接至电网安全保护接地上，以保证安全使用，并可防止出现异常情况。
注：所有电源线、信号线、接地线等接线时不要被其它物体压到或过度扭曲，以确保使用安全。

2 操作面板使用说明
2.1 操作面板的显示说明
根据系统工作状态，操作面板的液晶屏将显示当前的缝纫状态（包含停针位指示）。操作面板外观如下所示。

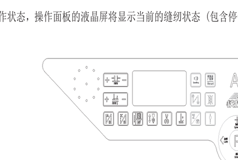

图 2-1 操作面板外观界面

2.2 操作面板各按键功能说明

序号	外观	名 称	功能描述
1		针距调节键	1、针距调整按键，空闲状态时短按加减针距
2		中途压脚高度调节键	1、压脚高度调整按键，空闲状态时短按加减压脚高度
3		前加固键	1、前固缝功能选择键，每按一次，在前固缝->前双固缝->关闭之间循环选择，对应液晶屏图标点亮。选择对应的键可设置A、B段的针数。

序号	外观	名 称	功能描述
			设置A、B段的针数。
4		后加固键	1、后固缝功能选择键，每按一次，在后固缝->后双固缝->关闭之间循环选择，对应液晶屏图标点亮。选择对应的键可设置C、D段的针数。
5		夹线键	1、按此键，液晶屏夹线图标亮，夹线功能开启，再按一次，夹线功能关闭；2、少鸟巢开启时夹线功能强制开启
6		抬压脚键	1、短按此键，用于循环切换抬压脚功能选择顺序为抬压脚开->中途抬压脚开->剪线后抬压脚开->中途抬压脚关->剪线后抬压脚关->抬压脚关；2、长按此键，用于开启或关闭抬压脚功能
7		剪线键	1、按此键，用于开关自动剪线功能
8		模式切换键	1、按此键，用于切换缝纫机工作模式，顺序为自由缝->W缝->多段缝
9		上下停针位键	1、按此键切换上/下停针位
10		花样缝键/计件界面键	1、短按此键进入花样缝模式，花样缝模式中短按此键，切换花样缝界面和花样缝设置界面 2、长按此按键进入/退出计件模式
11	P	进入参数区功能键	1、参数功能进入键
12	加速 Speed	参数加键（速度加）	1、在进入参数功能参数号/值加 2、初始待机下速度加
13	减速 Speed	参数减键（速度减）	1、在进入参数功能参数号/值减 2、初始待机下速度减
14	左移 Left	左移键	1、参数设定中，向左选择参数范围
15	右移 Right	右移键	1、参数设定中，向右选择参数范围
16	恢复出厂设置 Reset	恢复出厂设置	1、长按恢复出厂设置
17		锁针键	1、按此键，锁针功能依次切换为前锁针->后锁针->前后锁针->关闭；

序号	外观	名 称	功能描述
18	Speaking	语音键	1、短按循环开启关闭语音功能及开机语，依次切换为语音功能开->开机语开->开机语关->语音功能关 2、报错时短按此按键播报语音导航
19		少鸟巢键	1、仅-N少鸟巢机型可操作，短按用于开启/关闭少鸟巢功能 2、长按进入少鸟巢常用参数快捷调节界面

3 参数调节
3.1 进入操作员参数模式及保存
空闲模式下，长按Ⓟ键进入操作员参数模式。按《左移 Left》或《右移 Right》移动光标，相应位数值闪烁，再按加速 Speed或减速 Speed修改该位数值，按Ⓟ键，保存参数。如果参数未修改，按Ⓟ键退出参数模式；如果参数已经修改，第一次按键保存参数，第二次按Ⓟ键退出参数模式。

3.2 进入技术员参数模式及保存
按住Ⓟ键开机进入技术员参数模式。参数调节方式同操作员参数调节方式。

3.3 速度调节
在空闲模式下，按加速 Speed键 减速 Speed键 调速度。向上调快，向下调慢，每按一次调整数值50，可以长按连续加减。

3.4 语言种类切换
长按语音按键，通过按加速 Speed或减速 Speed键切换参数号。切换参数时提示对应语言“语音功能开”，界面参数和语言名称如下表所示(表格仅多国语言版本)：

0	1	2	3	4	5	6	7	8	9
英语	西班牙语	葡萄牙语	俄罗斯语	阿拉伯语	越南语	波斯语	孟加拉语	土耳其语	印尼语
10	11	12	13						
波兰语	意大利语	泰语	乌克兰语						

3.5 恢复出厂设置
长按恢复出厂设置键恢复出厂设置，作为恢复出厂设置的快捷方式。

3.6 进入监控模式
在空闲模式下，按Ⓟ+抬压脚键进入，按上下键调整监控参数项，按P键退出。（若为24、25、26、28项，长按P键保存当前监控值为对应参数，若保存成功，显示OK，短按P键退出监控模式）

3.7 上停针位置设置
进入监控参数项24，将手轮调整至上停针（参数会随着手轮位置而变化），长按Ⓟ键保存参数（保存后，下针位会自动进行相应调整），按Ⓟ退出监控模式。

3.8 步进电机位置校正
长按P+针距加键，进入“快速调参模式”，短按加号键或减号键切换选项，该模式有以下选项：
1) 选项“0”：选项“0”进行步进电机“0”位设置，放一张纸在针板上，踏板踩到底进行不带线空缝，检查机针是否在一个孔内运行，通过调节选项“0”的值进行校准，设置好后短按P键保存；
2) 选项“4”：选项“4”调节顺缝4.0针距大小，踩10个针距，测量针距实际数值3.9~4.1mm，针距偏小把范围值调大，偏大把范围值调小，短按P保存；
3) 选项“-4”：选项“-4”调节倒缝4.0针距重合（要求至少对10针），倒缝偏小就调大范围值，偏大就调小范围值，短按P保存；
4) 选项“5”：选项“5”调节顺缝5.0针距大小，踩10个针距，测量针距实际数值4.8~5.2mm；短按P保存；
5) 选项“-5”：选项“-5”调节倒缝5.0针距重合（要求至少对5针），短按P保存；如倒缝调不太导致不能对针，可以将顺缝调小一些比如调为4.8mm，P145参数值不要超过630.
6) 选项“-3”：选项“-3”调节倒缝3.0针距重合（要求至少对5针），短按P保存。
7) 选项“-2”：选项“-2”调节倒缝2.0针距重合（要求至少对5针），短按P保存。
8) 选项“L”：选项“L”调节压脚高度，中途停车时用量块测量压脚抬起高度，设置合适的值（调大增加高度，调小降低高度），测量抬压脚抬起高度为1mm，设置好后短按P保存；再次短按P退出快速调参模式。

备注：调整线迹重合度时为了便于调试，速度会自动变成200 rpm，离开此界面后，速度恢复正常。

3.9 计件模式说明
3.9.1 进入/退出计件功能界面
进入计件界面：长按计件图标，如下图；
退出计件界面：方式1：长按计件图标；方式2：短按自由缝图标；
A区域显示参数号（下图显示v01），B区域显示参数值（下图显示0000）

计件图标 v01 0000 A B 显示区域

3.9.2 开启计件功能
设定v09计件模式参数为1，开启计件功能；
查看v01可以实时显示剪线件数；
可通过v10设定剪线次数和件数的关系，例如剪线3次为1件，需设定v10为3.
缝纫界面计件图标点亮表明计件功能开启。

3.9.3 生产完成率显示
设定v02目标件数；
查看v03可以显示生产目标完成率；

3.9.4 当前生产效率显示
设定v04目标效率值，通过查看v06可以显示当前生产效率
其中v05显示当前应该生产的件数；

3.9.5 生产效率提醒功能
设定生产效率：没有设定目标效率（v04为0时）默认关闭提醒功能，开启提醒功能需要设定目标效率（v04）；当开机0.5小时后，如当前效率＜目标效率，快反王指示灯以呼吸的形式进行提醒，可按P键取消当次提醒；每隔1小时后会再次开始提醒；任何时候，当前效率≥目标效率，取消提示；提醒方式可以通过：快反王指示灯和语音播报的方式提醒，参考v11参数；

3.9.6 一键待机功能
在计件界面，按剪刀键进入待机模式，快反王指示灯闪烁，提示目前暂停了计件功能。再次按剪刀键，退出待机模式，快反王指示灯停止闪烁。待机不会影响正常缝纫，只暂停计件和计时的数据；

3.9.7 一键撤销功能
在v01界面，按减速 Speed键可以快捷减少错误的计数；

3.9.8 密码锁
密码设定：为了防止车工更改参数，可通过v12参数设置密码，密码锁定具体参数号，请查看参数表；
密码生效：密码设定后，需要重新开机使密码生效，此时查看v12参数将显示随机数值；
解密：修改v12参数为正确密码后，解锁相关参数；
修改密码：解密后，修改v12参数的值，可以修改密码；

3.9.9 生产数据清除
设定v13为1，将会清除计件件数和生产效率相关的时间，件数和生产时间都会被清零，但不会清除设定的模式。如需要单独清除v01件数值，可直接调节v01为0；

3.9.10 恢复出厂设置
设定v13为2，将会恢复v01-v11为默认值，并清零生产件数和生产时间等信息。

3.9.11 参数号和功能表

V参数号	参数范围默认值	参数	密码保护	说明
01	0~9999 默认0	生产件数		
02	0~9999 默认9999	目标件数	√	设定需要生产的目标件数，与生产件数进行对比，从而计算出目标完成率
03	/	目标完成率		生产件数÷目标件数×100%
04	0~9999 默认0	目标效率	√	每分钟应该生产的件数 数值÷100，例如设定33表示0.33件/分钟
05	/	当前目标件数		开工时间*目标效率 开工时间：开机时间-暂停时间
06	/	当前效率		生产件数÷当前目标件数
07	/	开工效率（个人）		电机运行时间÷（开机时间-暂停时间）
08	/	开工效率（公司）		电机运行时间÷开机时间
09	0~10 默认0	计件模式	√	0：关闭计件模式，缝纫界面计件图标不显示；1：开启计件模式，件数递增，缝纫界面显示计件图标；其他：保留暂不使用
10	1~9999	计件单位	√	每件衣服需要的剪线次数

V参数号	参数范围默认值	参数	密码保护	说明
	默认1			例如设定2表示：剪线2次生产件数加1
11	0~3 默认0	效率提醒功能		0：关闭LOGO灯提示，关闭语音提示；1：开启LOGO灯提示，关闭语音提示；2：关闭LOGO灯提示，开启语音提示；3：开启LOGO灯提示，开启语音提示；
12	0~9999 默认0000	密码功能	√	
13	0~2 默认0	数据清除		0：无 1：清除计件和效率等数值（不含：模式、计件单位、效率提醒、密码功能） 2：恢复计件全部参数为出厂默认值

3.10 参数表
3.10.1 操作员参数(长按P键进入)

参数项	参数描述	默认值	参数范围	说明
P00	起缝速度(r/min)	200	100-800	
P01	自由缝最高转速(r/min)	3800	200-5000	
P02	多段缝速度(r/min)	3500	200-3500	
P03	上下停针选择	1	0-1	0：上停针 1：下停针
P04	前固缝速度(r/min)	1800	200-3000	
P05	后固缝速度(r/min)	1800	200-3000	
P06	W缝速度(r/min)	1800	200-3000	
P07	慢速起缝速度(r/min)	800	100-2000	
P08	慢速起缝针数	2	1-9	
P09	慢速起缝开关	0	0-1	0：关闭 1：打开
P10	W缝补偿1	0	-20-20	正缝切倒缝
P11	W缝补偿2	0	-20-20	倒缝切正缝
P12	补半针延迟时间(ms)	150	1-180	
P13	补一针延迟时间(ms)	180	150-250	
P14	补针速度(r/min)	200	100-500	
P15	按键补针模式	0	0-2	0：按时间补针 1：补半针 2：补一针
P18	起始回缝补偿A	0	-20-20	
P19	起始回缝补偿B	0	-20-20	
P21	手动倒缝最高速度(r/min)	3500	0-3800	
P22	补针时倒缝关闭阀值	8	0-9999	
P23	脚踏板控速曲线模式	0	0-3	0：直线 1：两段斜率 2：曲线（平方、开方） 3：S曲线
P24	踏板剪线位置（抬压脚开）	350	0-4095	
P25	终止回缝补偿C	0	-20-20	
P26	终止回缝补偿D	0	-20-20	
P27	踏板剪线位置（抬压脚关）	550	0-4095	
P29	幂次控速曲线辅助参数	1	0-1	0：平方 1：开方
P30	电机低速加力功能开关	0	0-2	0：正常 1：电机加力 2：电机加力+反拉控制
P31	剪线加力系数（电机加力）	35	10-60	
P32	夹线电磁铁全出力时间	40	1-200	
P33	夹线电磁铁出力度	30	1-100	
P34	多段缝运动模式选择	0	0-1	0：一键触发功能关 1：一键触发功能开
P35	夹线开关	1	0-1	0：关闭 1：打开

参数项	参数描述	默认值	参数范围	说明
P38	剪线开关	1	0-1	0关闭 1开启
P39	缝中抬压脚开关	0	0-1	0关闭 1开启
P40	剪线后抬压脚开关	0	0-1	0关闭 1开启
P41	计件数计量单位	1	1-50	
P42	计件数总数设定	9999	1-9999	
P43	计件数模式选择	0	0-6	0.关闭 1.升序循环计数 2.降序循环计数 3.升序计数，计满报警并停止运行 4.降序计数，减为0报警并停止运行 5.升序计数，计满报警提示，继续运行 6.降序计数，减为0报警提示，继续运行；注：短按P取消报警 升序循环计数

3.10.2 技术员参数表（按住P键再开机进入）

参数项	参数描述	默认值	参数范围	说明
P44	轻前踏抬压脚确认延迟时间	0	0-300	0：关闭 1-300：根据延迟时间开启
P47	剪线后反拉	360	200-360	
P49	剪线速度(r/min)	250	100-500	
P52	放压脚延迟时间(ms)	2	0-500	
P53	抬压脚功能选择	1	0-2	0关闭 1半后踏抬压脚 2全后踏抬压脚
P54	背光亮度	100	0-100	
P56	上电自动找上针位	1	0-1	0关闭 1开启
P58	上停针调整角度	83	0-359	
P59	下停针调整角度	176	0-359	
P60	测试速度(r/min)	3800	200-5000	
P61	老化运行时间(s)	3	1-255	
P62	特殊运行模式	0	0-5	0：正常 1：简易缝 2：初始角测试 3：自动测试模式 4：电机测试模式 5：电磁铁测试模式
P63	老化停止时间(s)	2	1-255	
P66	机头保护开关检测	1	0-1	0：关闭 1：开启
P67	机头保护开关逻辑	1	0-1	0：正 1：反
P70	踏板抬压脚位置设定	1000	0-4095	
P71	起缝延迟时间	80	0-900	
P72	踏板前踩运行开始位置	400	0-4095	
P73	踏板低速运行结束位置	800	0-4095	
P74	踏板模拟量最大值	4000	0-4095	
P75	踏板回中位置设定	1650	0-4095	
P78	夹线结束角度	130	10-359	
P79	夹线结束角度	320	0-359	
P80	剪线开始角度	0	0-359	
P81	剪线加力角度	70	0-359	
P82	剪线结束角度	180	0-359	
P83	踏板抬压脚确认时间(ms)	150	1-500	
P84	安全开关报警确认时间(ms)	300	1-500	
P85	安全开关报警恢复时间(ms)	50	1-200	
P86	两段斜率转折点速度(r/min)	1500	0-4000	
P87	两段斜率中间模拟量	2700	0-4095	
P88	计件数计数单位	1	1-9999	
P89	计件数总数设定	9999	1-9999	

参数项	参数描述	默认值	参数范围	说明
P90	计件数模式选择	0	0-6	0：关闭 1：升序循环计数 2：降序循环计数 3：升序计数，计满报警并停止运行 4：降序计数，减为0报警并停止运行 5：升序计数，计满报警提示，继续运行 6：降序计数，减为0报警提示，继续运行；注：短按P取消报警
P91	针数计数值	0	0-9999	
P92	件数计数值	0	0-9999	
P93	语音开关	1	0-1	0关闭 1开启
P94	开机语音开关	1	0-1	0关闭 1开启
P95	语音切换	0	0-1	0第一国家语言 1第二国家语言（双语版本）
		0	0-13	0、英语；1、西班牙语；2、葡萄牙语；3、俄罗斯语；4、阿拉伯语；5、越南语；6、波斯语；7、孟加拉语；8、土耳其语；9、印尼语；10、波兰语；11、意大利语；12、泰语；13、乌克兰语（多国语言版本）
P97	主要部针距	35	0-50	
P98	密缝模式选择	0	0-3	0关闭 1-前加密 2-后加密 3-前后加密
P99	针距锁	0	0-1	0关闭 1开启
P100	手动倒缝切换限速功能选择	0	0-1	0关闭 1开启
P101	1/2针距按键重定义选择	0	0-1	0关闭 1开启
P107	防断针功能选择开关	1	0-1	0：关 1：开
P108	防断针开始机械角度	20	0-359	
P109	防断针结束机械角度	90	0-359	
P110	定针缝中途剪线后加固缝功能选择开关	0	0-1	0：关 1：开
P111	起缝微抬压脚开关	0	0-1	0：关 1：开
P112	起缝压脚微抬开始角度	0	0-359	
P113	起缝压脚微抬结束角度	200	0-359	
P114	起缝抬压脚开持续时间限制	200	0-1000	
P124	起始密缝针距	8	0 - 50	
P125	起始密缝方向	0	0-1	0-正缝 1-倒缝
P126	起始密缝速度	1000	100 - 2500	
P127	起始密缝针数	2	0 - 12	
P128	终止密缝针距	5	0 - 50	
P129	终止密缝速度	1800	100 - 2500	
P130	终止密缝针数	2	0 - 12	
P131	终止密缝方向	0	0 - 1	0-正缝 1-倒缝
P132	花样缝最高速	2000	200~3000	
P133	步进Z信号相对于0mm的偏移量	-10	-999 ~999	
P134	步进Z信号相对于步进停车的偏	1050	0 -2500	
P161	正缝针距速度补偿比例	100	70-130	
P162	倒缝针距速度补偿比例	100	70-130	
P163	花样缝倒针距补偿（百分比）	100	70-130	
P164	花样缝正针距补偿（百分比）	100	70-130	
P165	正缝针距速度补偿(大针距)	100	70-130	
P166	倒缝针距速度补偿(大针距)	100	70-130	
P169	3.5-4.5针距倒缝限速	3500	0-3800	
P170	4.6针距以上倒缝限速	3200	0-3500	
P171	正缝针距补偿比例	100	70-130	
P172	倒缝针距补偿比例	100	70-130	
P173	中途抬压脚高度	9	1-13	
P174	剪线抬压脚高度	9	1-13	

参数项	参数描述	默认值	参数范围	说明
P175	抬压脚高度微调	0	-999-999	
P177	压脚下落速度	400	100-800	
P179	压脚抬起速度	400	200-800	
P181	抬压脚最大高度	13	0-13	
P182	步进抬压脚超时保护时间(s)	10	1-20	
P183	步进针距切换动作角度	140	0-359	
P193	1/2按键针距选择	0	0-5	0：1/2针距 1：1/4针距 2：1/8针距 3：倒1/2针距 4：倒1/4针距 5：倒1/8针距
P194	起缝第一针速度	600	100-1500	
P195	起缝第二针速度	1200	100-2000	
P196	起缝第三针速度	0	0-4000	
P197	针距单位	0	0-1	0mm 1英制
P202	母线电压补偿	0	-30-30	
P204	花样缝补偿1	0	-20-20	正缝切倒缝
P205	花样缝补偿2	0	-20-20	倒缝切正缝
P220	步进送布最大电流	15	5-18	
P230	最大针距限制	75	0-75	限制最大针距
P240	微抬压脚高度	50	0-1000	
P241	微抬压脚允许角度最小值	180	0-359	
P242	微抬压脚允许角度最大值	240	0-359	
P245	W缝首段针数增减	0	-99-99	
P246	W缝末段针数增减	0	-99-99	
P247	多段缝每段剪线开关	0	0-2	
P248	加固缝打开时的夹线开始角度	100	0-359	
P249	加固缝关闭时的夹线开始角度	270	0-359	
P250	密缝打开时的夹线开始角度	130	0-359	
P251	密缝关闭时的夹线开始角度	320	0-359	
P256	少鸟巢模式开关	1	0-1	
P257	少鸟巢拨线开始角度	160	1-200	下停针位
P258	少鸟巢拨线持续时间	15	15-40	剪线到位后延时时间，此时间控制拨线关闭
P259	松线功能设定	1	0-1	0：关闭；1：开启；
P260	松线电磁铁保护时间（s）	20	1-60	保持时间后强制关闭，防止电磁铁长时间吸合而发烫
P261	剪线松线开始角度	30	1-359	松线开始角度（下定位为0°计算）（鸟巢关）
P262	剪线松线结束角度	180	1-359	松线结束角度（下定位为0°计算，需大于P101设置值）（鸟巢关）
P263	松线力度	3	1-5	
P265	少鸟巢松线开始角度	1	1	
P266	少鸟巢松线结束角度参数	65	1-180	
P267	少鸟巢夹线开启角度	310	5-359	
P268	少鸟巢夹线结束角度	359	10-359	
P269	少鸟巢自由缝慢速时夹线器补偿角度	6	0-359	
P270	少鸟巢第一针限速	200	0-300	
P272	剪线电磁铁全开通时间	100	50-100	
P273	剪线电磁铁保持力度	50	30-100	
P274	松线全开通时间	40	40-100	
P275	松线电磁铁保持力度	30	30-100	
P276	拨线电磁铁保护时间	12	1-60	
P277	剪线时松线延时时间	10	0-30	

参数项	参数描述	默认值	参数范围	说明
P283	拨线电磁铁保持力度	100	0-100	
P284	固缝角度补偿	15	0-90	
P292	拖布轮开关	0	0-1	
P293	步进启动角度补偿	0	-20-20	

3.10.3 监控参数表（开机后按P键+抬压脚键进入）

参数编号	参数描述	参数编号	参数描述
M10	针数计数值	M23	初始角度
M11	件数计数值	M24	机械角度
M13	操作面板软件版本号	M25	踏板前踩模拟量最大值
M18	控制器主板软件版本号	M26	踏板回中模拟量采样值
M20	母线电压	M28	踏板剪线模拟量采样值
M21	机头速度	M30-M37	历史故障代码
M44	步进参考位置	M45	步进Z信号
M46	主轴Z信号	M58	步进电机开机找电角度值
M59	步进电机电流值	M64	步进上次动作最大电流

4 错误代码
4.1 故障代码表
若系统出现报错或报警，请首先检查如下项：1 先确认机器的连接线是否连接完好；2 确认电控和机头是否匹配；3 确认恢复出厂是否准确。

故障代码	代码含义	解决措施
Err-01	主轴电机过流（硬件）	1、关闭系统电源，30秒后重新接通电源。2、检查主轴电机编码器、电控是否有损坏等不良现象若有则及时更换。3、排除后重启系统若仍不能正常工作，请拨打4008876858。
Err-02	主轴电机过流（软件）	
Err-03	欠压	断开控制器电源，检查输入电源电压是否低于176V。若电源电压低于176V，请在电压恢复正常后重新启动控制器。若电压恢复正常后，启动控制器仍不能正常工作。请联系当地服务商或拨打4008876858。
Err-04	过压（停机时）	断开控制器电源，检查输入电源电压是否高于264V。若电源电压高于264V，请在电压恢复正常后重新启动控制器。若电压恢复正常后，启动控制器仍不能正常工作。请联系当地服务商或拨打4008876858。
Err-05	过压（运行时）	断开控制器电源，检查输入电源电压是否高于264V。若电源电压高于264V，请在电压恢复正常后重新启动控制器。若电压恢复正常后，启动控制器仍不能正常工作。请联系当地服务商或拨打4008876858。
Err-07	主轴电机电流检测回路故障	关闭系统电源，30秒后重新接通电源观察是否能正常工作。重试几次，若该故障频繁出现。请联系当地服务商或拨打4008876858。
Err-08	主轴电机堵转	1、请检查是否有异物缠绕在机头上，检查机器旋梭是否有线头卡死，机器偏心轮是否有卡死现象。2、断开控制器电源，检查主轴电机电源输入插头是否脱落、松动、破损。3、排除后重启系统仍不能正常工作。请联系当地服务商或拨打4008876858。
Err-10	面板通讯故障	1、请检查操作面板与电控的连线是否脱落、松动、断裂。2、排除后重启系统若仍不能正常工作。请联系当地服务商或拨打4008876858 。
Err-12	主轴电机初始角度检测故障	请断电后再尝试2-3次，若仍报故障。请联系当地服务商或拨打4008876858。
Err-13	主轴电机编码器故障	1、关闭系统电源，30秒后重新接通电源。2、检查主轴电机编码器、电控是否有损坏等不良现象若有则及时更换。3、排除后重启系统若仍不能正常工作，请请联系当地服务商或拨打4008876858。
Err-14	电控eeprom故障	关闭系统电源，30秒后重新接通电源，控制器若仍不能正常工作，请联系当地服务商或拨打4008876858。
Err-15	主轴电机编码器故障（超速）	1、关闭系统电源，30秒后重新接通电源。2、检查主轴电机编码器、电控是否有损坏等不良现象若有则及时更换。3、排除后重启系统若仍不能正常工作，请拨打4008876858。
Err-16	主轴电机编码器故障（电机反转）	
Err-17	面板参数读写故障	关闭系统电源，30秒后重新接通电源，控制器若仍不能正常工作，请联系当地服务商或拨打4008876858。
Err-18	主轴电机过载	检查主轴电机是否堵转，若未堵转，请联系当地服务商或拨打4008876858。

故障代码	代码含义	解决措施
Err-19	电机类型不匹配	关闭系统电源，30秒后重新接通电源，控制器若仍不能正常工作，请联系当地服务商或拨打4008876858。
Err-20	控速器故障	1、请检查脚踏控速器连接线是否脱落、松动或脚踏控速器是否损坏。2、排除后重启系统仍不能正常工作。请联系当地服务商或拨打4008876858。
Err-21	倒缝电机过流（硬件）	关闭系统电源，检查倒缝电机接插口，重启电控。如若还是报错，请联系当地服务商或拨打4008876858
Err-22	倒缝电机过流（软件）过流	
Err-23	倒缝电机电流检测回路故障	
Err-24	倒缝电机堵转	
Err-28	倒缝电机编码器故障（Z信号）	
Err-29	倒缝电机编码器故障（AB信号）	
Err-30	密码锁 定时停机故障	达到机器使用设定时间，如需继续使用，请联系当地服务商或拨打4008876858。

4.2 安全报警表

报警代码	代码含义	解决措施
A-UP	翻抬开关报警	摆正机头,确保翻抬开关复原
ALR-1	机头按钮短路报警	关闭系统电源，更换机头灯按钮

A5E-A electric control box manual

• Safety Precautions
• Before using this product, please read the User's Guide and the manual of the machine attached with it.
• This product must be installed or operated by professionally trained personnel.
• Please keep away from the arc welding equipment to avoid the electromagnetic wave from interfering with the controller.
• Please do not use it at room temperature above 45°or below 0°.
• Please do not use it in places with humidity below 30% or above 95% or where there is dew and acid mist.
• When installing the control box and other parts, turn off the power and unplug the power plug.
• To prevent interference or electric leakage accidents, make a good grounding work. The grounding wire of the power cord must be firmly connected to the earth.
• All parts for maintenance must be supplied or approved by the Company before they can be used.
• The power must be turned off and the plug unplugged before any maintenance action is performed.There is a high-voltage danger in the control box. You must shut down the power for 5 minutes before opening the control box.

1 Product Installation
1.1 product specification

Voltage	AC 220±20% V AC 110±20% V
Supply frequency	50Hz/60Hz
Rated power	550W

1.2 The connection of interface plug
Insert the connecting plugs of the foot pedal and the head of the machine into the corresponding socket at the back of the controller. Each socket names are shown in figure 1-2-2.Please check whether the plug is inserted.

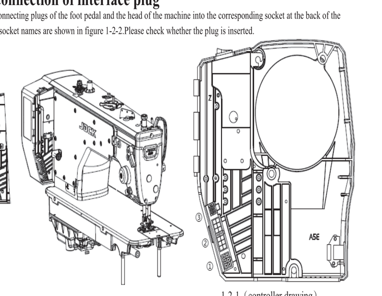

1-2-1（controller drawing）
Socket of foot pedal and updating;
Socket of Electromagnet, LED Lamp
Air suction device interface

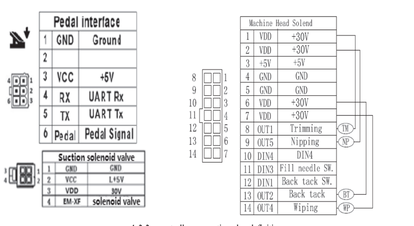

1-2-2 controller connection plug definition
If it cannot be inserted normally, please check the plug and socket match or not, the direction of the insertion or the direction of the pin is correct or not.

1.3 The grounding and connect
The grounding of the system must be completed, and qualified electrical engineers shall be required to construct. Before the product is energized and put into use, it is necessary to ensure that the AC input already connected the grounding. The standard grounding line is the yellow and green line. The ground wire must be reliably connected to the grid safely to protect grounding and ensure safely using and to prevent abnormal conditions.
All power wires, signal wires, ground wires and other wiring should not be pressed or distorted by other objects to ensure safety.

2 Operation panel introductions
2.1 display introduction
According to the working status of the system, the LCD of the operation panel will display the current sew status (including the needle position indicate).The appearance of the operation panel is shown as below.

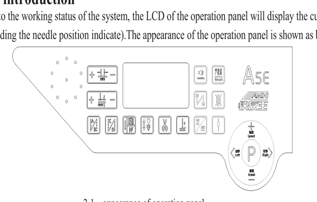

2-1 appearance of operation panel

2.2 function declaration of each key

	Key	Name	Indicate
1		Stitch length adjustment key	Stitch length adjustment key, press to increase or decrease stitch length in idle state
2		Presser foot height setting	Press to change the height of Presser foot lifting in idle state
3		Front bar-tacking key	1. The front bar-tacking selection key is pressed once every short time to cycle between setting front bar-tacking ->front double bar-tacking ->closing, and the corresponding LCD icon is lit. Select

	Key	Name	Indicate
			the corresponding key to set the number of stitches of A and B segments.
4		Back bar-tacking	1. Press the back bar-tacking selection key once a short time to cycle between setting back bar-tacking ->back double bar-tacking ->close, and the corresponding LCD icon will light up. Select the corresponding key to set the number of stitches for segments C and D.
5		Clamping function	1.Press this key, the LCD thread tension icon will be on, and the line clamping function will be on. Press again, and the line clamping function will be off; 2. When the little bird's nest is opened, the thread clamping function is forced to open, and the key is invalid
6		Press foot lift key	Short press this button to cycle through the presser foot lifting function selection sequence: presser foot lifting on ->midway presser foot lifting on ->presser foot lifting on after thread trimming ->midway presser foot lifting off ->presser foot lifting off after thread trimming ->presser foot lifting off ->presser foot lifting offLong press this button to turn on or off the presser foot lift function
7		Trimmer key	1. Press this key briefly to switch the automatic thread trimming function
8		Mode switch key	1. Press this key briefly to switch the working mode of the sew machine. The sequence is free sew ->W sew ->multi-section sew
9		Needle position section key	1. Short press this key to switch the up and down needle stop position
10		Pattern sew key/piecework interface key	1. Short press this key to enter the pattern sew mode. In the pattern sew mode, short press this key to switch the pattern sew interface and the pattern sew setting interface 2. Long press this key to enter or exit the piece counting mode
11	P	Parameter mode	Enter the parameter function
12	加速 Speed	Up key(speed up)	Enter this mode, adjust this key, increase speed
13	减速 Speed	Down key(speed down)	Enter this mode, adjust this key, decrease speed
14	左移 Left	Left key	Turn to left to choose parameter
15	右移 Right	Right key	Turn to right to choose parameter
16	恢复出厂设置 Reset	Reset key	Long press the key to back to factory setting

	Key	Name	Indicate
17		Locksew key	1. Short press this key to switch the locking function to front condense stitch ->rear condense stitch ->front and rear condense stitch ->close;
18	Speaking	Voice key	1. Short press to turn on and off voice function and power-on language, and switch to voice function on ->power-on language on ->power-on language off ->voice function off 2. Short press this button to broadcast voice navigation when reporting an error
19		Clamping function without any thrum	1.Only - N model can be operated. Short press to set used or cancelled clamping function without any thrum 2. Long press to enter the quick adjustment interface of clamping function without any thrum

3 Parameter adjustment
3.1 Enter parameter mode and saving
Press Ⓟ, enter parameter mode, then press 《Left or Right》 to move the lit, corresponding number flashing, then press Speed or Speed to modify this value, press Ⓟ, save the parameter. If not modified, press Ⓟ to log out parameter mode, if already modify, firstly save parameter, then press Ⓟ to log out parameter mode.

3.2 Enter technician parameter mode and save it
Press Ⓟ and turn on the machine to enter technician parameter mode.The methods is same as parameter mode.

3.3 Speed adjustment
Press Speed and Speed to adjust the speed. For up, to adjust fast, for down, to adjust slow.Each adjustment value is 50. You can press and hold for continuous addition and subtraction

3.4 Language change
Long press the voice button and switch parameter numbers by pressing the Speed or Speed keys. When switching parameters, the corresponding language "voice function on" will be prompted. The interface parameters and language names are shown in the table below (The table only for multi lingual versions):

0	1	2	3	4	5	6	7	8	9
English	Spanish	Portuguese	Russian	Arabic	Vietnamese	Farsi	Bengali	Turkish	Indonesian
10	11	12	13						
Polish	Italian	Thai	Ukrainian						

3.5 Factory setting
Press the Reset for a long time, back to the factory setting.

3.6 Enter monitoring system
Press Ⓟ+ to enter this mode, press up and down key to adjust this parameter, press P, then can log out.(if it is 24、25、26、28, then press P to save this monitoring value as the corresponding parameter, if save successfully, show OK, press P for short time to log out this mode.)

3.7 Upper needle stop position setting
Enter the monitoring item 24, adjust the handwheel to up needle position (the parameters will change with the

position of the handwheel), long press Ⓟ to save the parameters (after saving, the needle position will automatically adjust accordingly), and press Ⓟ to exit the monitoring mode.

3.8 Step motor position adjust mode
Long press the P+stitch length plus key to enter the "Quick Parameter Adjustment Mode", and short press the Speed or Speed key to switch options. The mode has the following options:
① Option "0": option "0" is used to set the "0" position of the stepper motor, place a piece of paper on the needle plate, step on the pedal to the bottom to perform empty sew without thread, check whether the needle operates in a hole, calibrate it by adjusting the value of option "0", and then press the P key briefly to save the setting;
② Option "4": option "4" is used to adjust the stitch length of 4.0 for forward sew, step on 10 stitch length, measure the actual value of the stitch length of 3.9-4.1mm, increase the range value if the stitch length is too small, and decrease the range value if the stitch length is too large, and press P to save;
③ Option "- 4": option "- 4" is used to adjust the overlap of 4.0 stitch length for reverse sew (at least 10 stitches are required). If the reverse sew is too small, the range value will be increased. If the reverse sew is too large, the range value will be decreased. Press P to save;
④ Option "5": option "5" is used to adjust the stitch length of 5.0 for forward sew, step on 10 stitch distances, and measure the actual stitch distance of 4.8-5.2mm; Short press P to save;
⑤ Option "- 5": option "- 5" is used to adjust the stitch length overlap of reverse sew 5.0 (at least 5 stitches are required). Press P to save; If the stitch cannot be aligned due to the small adjustment of the reverse sew, adjust the forward sew to 4.8mm, for example, and the P145 parameter value should not exceed 630
⑥ Option "- 3": option "- 3" is used to adjust the stitch length overlap of reverse sew 3.0 (at least 5 stitches are required). Press P to save.
⑦ Option "- 2": option "- 2" adjusts the stitch length overlap of reverse sew 2.0 (at least 5 stitches are required), and press P to save.
⑧ Option "L": option "L" is used to adjust the height of presser foot. When stopping midway, measure the lifting height of presser foot with a gauge block, set a suitable value (increase the height, decrease the height), measure the lifting height of presser foot as 1mm, and press P to save after setting; Short press P again to exit the quick parameter adjustment mode.
PS: In order to facilitate debugging, the speed will automatically change to 200 rpm when adjusting the stitch coincidence. After leaving this interface, the speed will return to normal.

3.9 Description of piecework mode
3.9.1 Enter/exit the piece counting function interface
Enter the piece count interface: Long press and hold the piece count icon, as shown in the following figure;
Exit the piece counting interface:
Method 1: Long press the piece counting icon; Method 2: Short press the free sew icon;
Area A displays the parameter number (v01 shown in the figure below), while Area B displays the parameter value (0000 shown in the figure below)

Piece Count Icon v01 0000 A B Display Area

3.9.2 Enable piece counting function
Set the v09 piece counting mode parameter to 1 and enable the piece counting function;
Viewing v01 can display the number of thread cutting pieces in real-time;
The relationship between the number of thread cuts and the number of pieces can be set through v10. For example, if cutting thread 3 times is 1 piece, v10 needs to be set to 3;
The illuminated piece counting icon on the sew interface indicates that the piece counting function is enabled.

3.9.3 Display of production completion rate
Set the target number of v02 pieces;
Viewing v03 can display the completion rate of production targets;

3.9.4 Current production efficiency display
Set the target efficiency value for v04 and display the current production efficiency by viewing v06
Among them, v05 displays the current number of pieces that should be produced;

3.9.5 Production efficiency reminder function
Set production efficiency: If there is no target efficiency set (when v04 is 0), the reminder function will be disabled by default. To enable the reminder function, the target efficiency (v04) needs to be set;
After starting up for 0.5 hours, if the current efficiency is less than the target efficiency, the A.M.H machine indicator light will remind you in the form of breathing, and you can press the P key to cancel the current reminder;
Reminders will start again every hour;
At any time, if the current efficiency is greater than or equal to the target efficiency, cancel the prompt;
Reminder methods can be achieved through: A.M.H machine indicator light and voice broadcasting;
The fast reverse king indicator light reminder is on by default, and the voice reminder is off by default;

3.9.6 One click standby function
On the piece counting interface, press the scissors button to enter standby mode, and the A.M.H machine indicator light will flash, indicating that the piece counting function is currently paused.
Press the scissors button again to exit standby mode, and the A.M.H machine indicator light will stop flashing.
Standby will not affect normal sew, only pausing the data of piece counting and timing;

3.9.7 One click cancellation function
In the v01 interface, pressing the key can quickly reduce the count of errors;

3.9.8 Password lock
Password setting: In order to prevent the lathe worker from changing parameters, the password can be set through the v12 parameter. The password locks the specific parameter number, please refer to the parameter table;
Password takes effect: After setting the password, it is necessary to restart the machine to make the password take effect. At this time, viewing the v12 parameter will display random values;
Decryption: After changing the v12 parameter to the correct password, unlock the relevant parameters;
Change password: After decryption, modify the value of the v12 parameter to change the password;

3.9.9 Production Data Clearing
Setting v13 to 1 will clear the time related to the number of pieces and production efficiency, and both the number of pieces and production time will be reset to zero. But the set mode will not be cleared.
If you need to clear the value of v01 separately, you can directly adjust v01 to 0 and save it;

3.9.10 Restore factory settings
Setting v13 to 2 will restore v01-v11 to the default value and reset information such as the number of production pieces and production time.

3.9.11 Parameter Numbers and Function Tables

V Parameter	Parameter Range	Parameter Name	Password Protection	Description
01	0~9999	Number of pieces produced		
02	1~9999	Target pieces	√	Set the target number of pieces to be produced and compare it with the number of pieces produced to calculate the target completion rate
03	real-time display	Target completion rate		Production quantity ÷ target quantity × 100%
04	0~9999	Target efficiency	√	N/100 minutes, for example, setting 33 means 0.33 pieces/minute
05	real-time display	Current target number of pieces		Number of pieces that should be completed currently
06	real-time display	Current efficiency		Production quantity ÷ Current target quantity
07	real-time display	Commencement efficiency (individual)		Motor running time ÷ (Power on time - Pause time)
08	real-time display	Commencement efficiency (company)		Motor running time ÷ Power on time
09	0~10	Piecework mode	√	0: Turn off piecework 1: Automatic piecework
10	1~9999	Piecework unit	√	Record as one piece every n times of thread cutting
11	0~3	Efficiency reminder function		0: Turn off the LOGO light prompt and turn off the voice prompt; 1: Turn on the LOGO light prompt and turn off the voice prompt; 2: Turn off the LOGO light prompt and turn on the voice prompt; 3: Turn on the LOGO light prompt and turn on the voice prompt;
12	0~9999	Password function	√	
13	0~9999	Data clear		0: None 1: Clear values such as piecework and efficiency (excluding mode, piecework unit, efficiency reminder, and password functions) 2: Restore all piecework parameters to factory default values

3.10 Parameters list
3.10.1Technician mode parameter (long press P key to enter)

Parameter List	Description	Default Value	Parameter range	Description
P00	Start cspeed(r/min)	200	100-800	
P01	Max speed of free sew (r/min)	3800	200-5000	
P02	Multi-segment sew speed(r/min)	3500	200-3500	
P03	Needle position	1	0-1	0: up 1: down
P04	Front bar-tacking speed (r/min)	1800	200-3000	
P05	Back bar-tacking speed (r/min)	1800	200-3000	
P06	W sew speed (r/min)	1800	200-3000	
P07	Soft start sew speed (r/min)	800	100-2000	
P08	Soft start sew stitch	2	1-9	
P09	Soft start sew switch	0	0-1	0: off 1: on
P10	W sew stitch compensation 1	0	-20-20	Normal sew to back sew compensation
P11	W sew stitch compensation 2	0	-20-20	Back sew to normal sew compensation
P12	Delay time for half stitch (ms)	150	1-180	
P13	Delay time for one stitch (ms)	180	150-250	
P14	Half stitch speed (r/min)	200	100-500	
P15	Mode of half stitch	0	0-2	0: Half stitch according to time to 1: half stitch 2: One stitch
P18	Front bar-tacking compensation A	0	-20-20	
P19	Front bar-tacking compensation B	0	-20-20	
P21	Max speed of manual reverse sew (r/min)	3500	0-3800	
P22	Value of backstitch during half stitch	8	0-9999	
P23	curve mode of pedal	0	0-3	0: straight 1: Slope 2: curve（square、extraction of a root） 3: S curve
P24	Pedal position of trimming	350	0-4095	
P25	Back bar-tacking compensation C	0	-20-20	
P26	Back bar-tacking compensation D	0	-20-20	
P27	Voltage value of trimming without presser foot lifting	550	0-4095	
P29	Power Control Curve Auxiliary Parameters	1	0-1	0:square 1: extract a root
P30	Switch for supplying power with low speed	0	0-2	0:normal 1:motor supplies more power 2: powerful motor + backwards to control
P31	Trimmingr strength coefficient (motor force)	35	10-60	
P32	Thread clamp full power time	40	1-200	
P33	Thread clamp keep duty	30	1-100	
P34	Multi-segment sew motion mode	0	0-1	0: one key start function off 1: one key

Parameter List	Description	Default Value	Parameter range	Description
	selection.			start function off
P35	Thread clamp switch	1	0-1	
P38	Trimmer switch	1	0-1	0: off 1:on
P39	Press foot lifter in halfway	0	0-1	0: off 1:on
P40	Switch of auto press foot lifter after trimming	0	0-1	0: off 1:on
P41	Unit of counter	1	1-50	
P42	Setting of total counter	9999	1-9999	
P43	Counter mode	0	0-6	0:off; 1: Ascending cycle count; 2:Descending cycle count;3:Ascending accounting to full, alarm and stop running 4:Descending accounting to 0, alarm and stop running;5:Ascending accounting to full, remind and keep running;6:Descending accounting to 0, alarm and keep running

3.10.2 Technician Parameter list (Press P and switch on to enter)

Parameter List	Parameter Name	Default Value	Parameter range	Description
P44	Press delay time	0	0-300	0: off 1-300:start according to the delayed time
P47	After trimmer and pull back	360	200-360	
P49	Trimmer speed (r/min)	250	100-500	
P52	Delaying time of down presser foot lift (ms)	2	0-500	
P53	Selection of presser foot lifting function	1	0-2	0 close ;1 half step back to lift the presser foot ;2 full step back to lift the presser foot
P54	Backlight brightness	100	0-100	
P56	Connect power and finding needle position automatically	1	0-1	0: No 1:Yes
P58	Adjustment angle of up needle position	83	0-359	
P59	Adjustment angle of down needle position	176	0-359	
P60	Testing speed (r/min)	3800	200-5000	
P61	Aging operation time (s)	3	1-255	
P62	Special running	0	0-3	0:normal ;1:easy sew ;2:initial angle testing 3:automatic testing mode;4: Motor Test Mode 5: Electromagnet Test mode
P63	Aging stopping time (s)	2	1-255	
P66	Protection switch of machine head testing	1	0-1	0: Off 1: On
P67	Protection switch of machine head	1	0-1	0: Positive 1: Negative
P70	Setting of press foot lift position of pedal	1000	0-4095	
P71	Delay time of start sew	80	0-900	
P72	Starting position of pressing the pedal forward	400	0-4095	
P73	End position of pedal low-speed operation (relative to the return center position	800	0-4095	

Parameter List	Parameter Name	Default Value	Parameter range	Description
P74	Max value of pedal analog	4000	0-4095	
P75	Setting of pedal back to middle position	1650	0-4095	
P78	Thread tension ending angle	130	10-359	
P79	Thread clamp end angle	320	0-359	
P80	Trimming starting angle	0	0-359	
P81	Trimming strength angle	70	0-359	
P82	Trimming ending angle	180	0-359	
P83	Pedal presser foot confirmation time. (ms)	150	1-500	
P84	The confirmation time of Safety switch alarm (ms)	300	1-500	
P85	The recovery time of Safety switch alarm (ms)	50	1-200	
P86	Speed of two slopes at a turning point. (r/min)	1500	0-4000	
P87	Two slope intermediate simulation	2700	0-4095	
P88	Unit of counting	1	1-9999	
P89	Setting of total counting	9999	1-9999	
P90	Counter mode	0	0-6	0:off ;1: Ascending cycle count; 2: Descending cycle count;3:Ascending accounting to full, alarm and stop running;4:Descending accounting to 0, alarm and stop running ;5: Ascending accounting to full, remind and keep running ;6: Descending accounting to 0, alarm and keep running Note: press P shortly to cancel alarm
P91	Stitch count value	0	0-9999	
P92	Piece count value	0	0-9999	
P93	Voice switch	1	0-1	0: Off 1: On
P94	Welcom voice switch	1	0-1	0: Off 1: On
P95	Language switch	0	0-1	0 First national language 1 Second national language(Bilingual version)
		0	0-13	0. English; 1. Spanish; 2. Portuguese; 3. Russian; 4. Arabic; 5. Vietnamese; 6. Persian; 7. Bengali; 8. Turkish; 9. Indonesian; 10. Polish; 11. Italian; 12. Thai; 13. Ukrainian (Multi national Voice Version)
P97	Main part stitch length	35	0-50	
P98	Condense stitch mode selection	0	0-3	0-Close 1-Front encryption 2-Back encryption 3-Front and back encryption
P99	Stitch Length Lock	0	0-1	0: Off 1: On
P100	Manual inverted seam switching speed limit function selection	0	0-1	0: Off 1: On
P101	1/2 stitch length key mode change	0	0-1	0: Off 1: On
P107	Safety needle break selection switch	1	0-1	0: Off 1: On
P108	Safety needle break starting mechanical angle	20	0-359	
P109	Safety needle break finished	90	0-359	

Parameter List	Parameter Name	Default Value	Parameter range	Description
	mechanical angle			
P110	Fixed stitches trimmer in sew and then bartack selection switch	0	0-1	0: Off 1: On
P111	sew micro lifting presser foot switch	0	0-1	0: Off 1: On
P112	Starting sew presser foot lifter move-up start angle	0	0-359	
P113	Starting sew presser foot lifter move-up finished angle	200	0-359	
P114	Opening time limit of seam lifting presser foot	200	0-1000	
P123	Duty cycle of full opening phase of the presser foot	100	0-100	
P124	Starting condense stitch length	8	0 - 50	
P125	Starting condense stitch direction	0	0-1	0- forward stitch 1- reverse stitch
P126	Starting condense stitch speed	1000	100 - 2500	
P127	Starting condense stitch needle number	2	0 - 12	
P128	Ending condense stitch needle	5	0 - 50	
P129	Ending condense stitch speed	1800	100 - 2500	
P130	Ending condense stitch needle number	2	0 - 12	
P131	Ending condense stitch needle number	0	0 - 1	0- forward stitch 1- reverse stitch
P132	Pattern sew max speed	2000	200~3000	
P133	Step Z signal relative to 0mm offset	-10	-999 ~999	
P134	Step Z signal relative to 0mm offset	1050	0 -2500	
P161	Compensation ratio of sew needle pitch speed	100	70-130	
P162	Reverse stitch pitch speed compensation ratio	100	70-130	
P163	compensation for Reverse stitch distance of pattern sew(percentage)	100	70-130	
P164	Stitch pitch compensation for pattern sew(percentage)	100	70-130	
P165	sew needle pitch speed compensation (large needle pitch)	100	70-130	
P166	Reverse stitch pitch speed compensation (large stitch pitch)	100	70-130	
P169	3.5-4.5 Stitch pitch reverse sew speed limit	3500	0-3800	
P170	4.6 Speed limit for reverse sew above needle pitch	3200	0-3500	
P171	Stitching needle length compensation ratio	100	70-130	

Parameter List	Parameter Name	Default Value	Parameter range	Description
P172	Reverse stitching needle length compensation ratio	100	70-130	
P173	Pause press foot height	9	1-13	
P174	Tirm press foot height	9	1-13	
P175	Press foot height adjust	0	-999~999	
P177	Press down speed	400	100-800	
P179	Press up speed	400	200-800	
P181	Press height limit	13	0-13	
P182	Stepmotor press up time	10	1-20	
P183	Stepmotor stitch act angle length change	140	0-359	
P193	1/2 stitch length key mode change	0	0-5	0:1/2 stitch length 1:1/4 stitch length 2:1/8 stitch length 3:reserve sew 1/2 stitch length 4: reserve sew 1/4 stitch length 5: reserve sew 1/8 stitch length
P194	Start sew first stitch speed	600	100-1500	
P195	Start sew second stitch speed	1200	100-2000	
P196	Start sew third stitch speed	0	0-4000	
P197	Stitch unit	0	0-1	0:mm 1:British systerm
P202	Bus voltage compensation	0	-30~30	
P204	Pattern sew compensation1	0	-20-20	Forward to reverse sew
P205	Pattern sew compensation2	0	-20-20	Reserve to forward sew
P220	Stepmotor max keep current	15	5-18	
P230	Max stitch length limit	75	0-75	Limit maximum needle pitch
P240	Height of micro lifting presser foot	50	0-1000	
P241	Minimum allowable angle of micro lifting presser foot	180	0-359	
P242	Maximum allowable angle of micro lifting presser foot	240	0-359	
P245	Increase or decrease in the number of stitches in the first section of W sew	0	-99-99	
P246	Increase or decrease in the number of stitches at the end of W sew	0	-99-99	
P247	Thread trimming switch for each section of multi section sew	0	0-2	
P248	Starting angle of thread clamping when reinforcement joint is opened	100	0-359	
P249	Start angle of thread clamping when reinforcement joint is closed	270	0-359	
P250	Starting angle of thread clamping when close seam is opened	130	0-359	

Parameter List	Parameter Name	Default Value	Parameter range	Description
P251	Starting angle of thread clamping when close seam is closed	320	0-359	
P256	Clamp function without any thrum switch	1	0-1	
P257	The starting angle of the little bird's nest	160	1-200	Lower needle stop position
P258	The duration of the little bird's nest dialing	15	15-40	Delay time after thread trimming is in place, which controls thread dialing off
P259	Loosening function setting	1	0-1	0: Close; 1: Open;
P260	Protection time of thread release electromagnet (ms)	20	1-60	Forced closing after holding time to prevent the electromagnet from getting hot due to long-time closing
P261	Starting angle of thread trimming and loosening	30	1-359	Start angle of loose line (calculated at 0° for lower positioning) (Bird's Nest Close)
P262	End angle of thread trimming and loosening	180	1-359	End angle of loose line (calculated as 0° for lower positioning, which should be greater than the parameter value of P101) (Bird's Nest Close)
P263	Thread loosening force	3	1-5	
P265	Starting angle of the loose line of clamp function without any thrum	1	1	
P266	Release end angle parameter of clamp function without any thrum	65	1-180	
P267	Opening angle of wire clamping with clamp function without any thrum	300	5-359	
P268	End angle of wire clamping with clamp function without any thrum	359	10-359	
P269	The compensation angle of the thread gripper when the free sew with clamp function without any thrum is slow	6	0-359	
P270	Speed limit for the first stitch with clamp function without any thrum	200	0-300	
P272	Full opening time of thread trimming	100	50-100	
P273	Thread trimming solenoid duty ratio	50	30-100	
P274	Full opening time of loose line	40	40-100	
P275	Loosening solenoid duty ratio	30	30-100	
P276	Protection time of wire pulling electromagnet	12	1-60	
P277	Delay time of thread loosening during thread trimming	10	0-30	
P283	The duty cycle of the wire pulling solenoid	100	0-100	
P284	Puller angle compensation	15	0-90	
P292	Mop wheel switch	0	0-1	

Parameter List	Parameter Name	Default Value	Parameter range	Description
P293	Stepmotor start angle compensation	0	-20-20	

3.10.3 Monitoring parameter list (press P + press foot lifter key to enter)

Number	Description	Number	Description
M10	Stitches account number	M23	Initial angle
M11	Pieces account number	M24	Mechanical angle
M13	Panel version number	M25	Max value for pedal forward press
M18	Main board version number for control box	M26	Sample value for pedal back
M20	Generatrix voltage	M28	Sample pedal value of trimming
M21	Machine speed	M30-M37	Historical Error number
M44	Step reference position	M45	Step Z signal
M46	Spindle Z signal	M58	Stepmotor Electric Angle
M59	Stepmotor current value	M64	Stepmotor last action maximum current

4 Error code
4.1 Error code list
If have Error or alarm, please check first as follows:1. Check the connection wire is connected or not; 2. Check the machine head is matched with the control box; 3. check reset is accurate or not.

Error number	Code meaning	Solutions
Err-01	Arm shaft motor overcurrent(hardwore)	1. Turn off the system power, and turn it on again after 30 seconds. 2. Check whether the arm shaft motor encoder and electronic control are damaged or in other poor conditions. If so, replace them in time. 3. If the system still does not work properly after troubleshooting and restart. Please contact your local service provider.
Err-02	Arm shaft motor overcurrent(software)	
Err-03	System undervoltage	Disconnect the power supply of the controller and check whether the input power supply voltage is lower than 176V. If so, please restart the controller after the voltage returns to normal. If the voltage returns to normal, it still does not work properly after the controller starts up. Please contact your local service provider.
Err-04	Overvoltage (during shutdown)	Disconnect the controller power and check whether the input power voltage is higher than 264V. If so, please restart the controller after the voltage returns to normal. If the voltage returns to normal, it still does not work properly after the controller starts up.Please contact your local service provider.
Err-05	Overvoltage (during operation)	Disconnect the controller power and check whether the input power voltage is higher than 264V. If so, please restart the controller after the voltage returns to normal. If the voltage returns to normal, it still does not work properly after the controller starts up.Please contact your local service provider.
Err-07	Arm shaft motor current detection circuit failure	Turn off the system power, and turn on the power again after 30 seconds to see whether it can work properly. Try a few times again. If the fault occurs frequently, please contact your local service provider.
Err-08	Arm shaft motor stalled	1. Please check whether there is any foreign object wrapped around the machine head, whether there is any thread residue stuck in the rotating shuttle, and whether the eccentric wheel of the machine is stuck. 2. Disconnect the power supply of the controller and check whether the input plug of the arm shaft motor power supply is detached, loose, or damaged. 3. If the system still does not work properly after troubleshooting and restart.Please contact your local service provider.
Err-10	Panel communication failure	1、Please check whether the connection between the operation panel and the electric control is drops off, loose, or broken. 2、If the system still does not work properly after troubleshooting and restart.Please contact your local service provider.
Err-12	Arm shaft motor initial angle detection failure	Please try 2-3 times again after power off. If it still fails.Please contact your local service provider.
Err-13	Arm shaft motor zero position fault	1. Turn off the system power, and turn it on again after 30 seconds. 2. Check whether the arm shaft motor encoder and electronic control are damaged or in other poor conditions. If so, replace them in time. 3. If the system still does not work properly after troubleshooting and restart. Please contact your local service provider.
Err-14	Master control eeprom components read/write failure	Turn off the system power, and then turn on the power again after 30 seconds. If the controller still does not work properly, please contact your local service provider
Err-15	Arm shaft motor overspeed protection	1. Turn off the system power, and turn it on again after 30 seconds. 2. Check whether the arm shaft motor encoder and electronic control are damaged or in other poor conditions. If so, replace them in time. 3. If the system still does not work properly after troubleshooting and restart. Please contact your local service provider.
Err-16	Arm shaft motor reverse	
Err-17	Pandel date read/write failure	Turn off the system power, and then turn on the power again after 30 seconds. If the controller still does not work properly, please contact your local service provider
Err-18	Arm shaft motor overload	Check whether the arm shaft motor is stalled. If not, please contact your local service provider
Err-19	Motor type mismatch	Turn off the system power, and then turn on the power again after 30 seconds. If the controller still does not work properly, please contact your local service provider.
Err-20	Pedal error	1、Please check whether the connection cable of the pedal speed controller is drops off, loose, or damaged. 2. If the system still does not work properly after troubleshooting and restart.Please contact your local service provider.
Err-21	Backstitch step motor hardware overcurrent	Turn off the system power, check the socket of the reverse sew motor, and restart the electric control. If the error is still reported, please contact the local service provider
Err-22	Backstitch step motor software overcurrent	
Err-23	Backstitch step motor current detection circuit failure	
Err-24	Backstitch step motor stalled	
Err-28	Backstitch step motor zero position fault	
Err-29	Reverse stitch stepping motor encoder AB signal abnormal	
Err-30	Password lock shutdown alarm	The machine has reached the set time. If further use is required, please contact your local service provider.

4.2 Safety alarm meter

Alarm code	Description	Solutions
A-UP	Alarm of safety switch	Return machine head to normal position, to make sure safety switch rebound
ALR-1	Alarm of machine head button with short circuit	Turn off system power and change the light button of machine head

装 箱 单
Packing list

序号 NO.	名 称	Description	数量 Quantity	备注 Note
1	说明书/零件手册	Instuction	1 set（套）	
2	机头	Sewing machine head	1	
3	油盘托盘	Oil reservoir tray	1	
4	漏斗	Oil reservoir tray	1	
5	调速器组件	Speed adjust asm	1	
6	拉杆组件	Rod asm	1	
7	机头支柱	Machine head rest pin	1	
8	机头连接钩部件	Hinge component	2	
9	机头连接钩座	Head connecting rubber cushion	2	
10	螺丝刀（大）	Screw driver L	1	
11	螺丝刀（中）	Screw driver M	1	
12	螺丝刀（小）	Screw driver S	1	
13	油壶	Oil reservoir	1	
14	机头罩	Machine head cover	1	
15	机针	Needle	1 bag（包）	
16	梭芯	Bobbin	2	
17	机头支架	Head bracket	2	
18	机头座垫	Head felt cushion	2	
19	线架组件	Thread Stand Components	1 set（套）	
20	鞋钉P19	Nail P19	2	
21	鞋钉P25	Nail P25	4	
22	木螺钉	Wood screw	6	